CS3330: Caching

2004 CPU

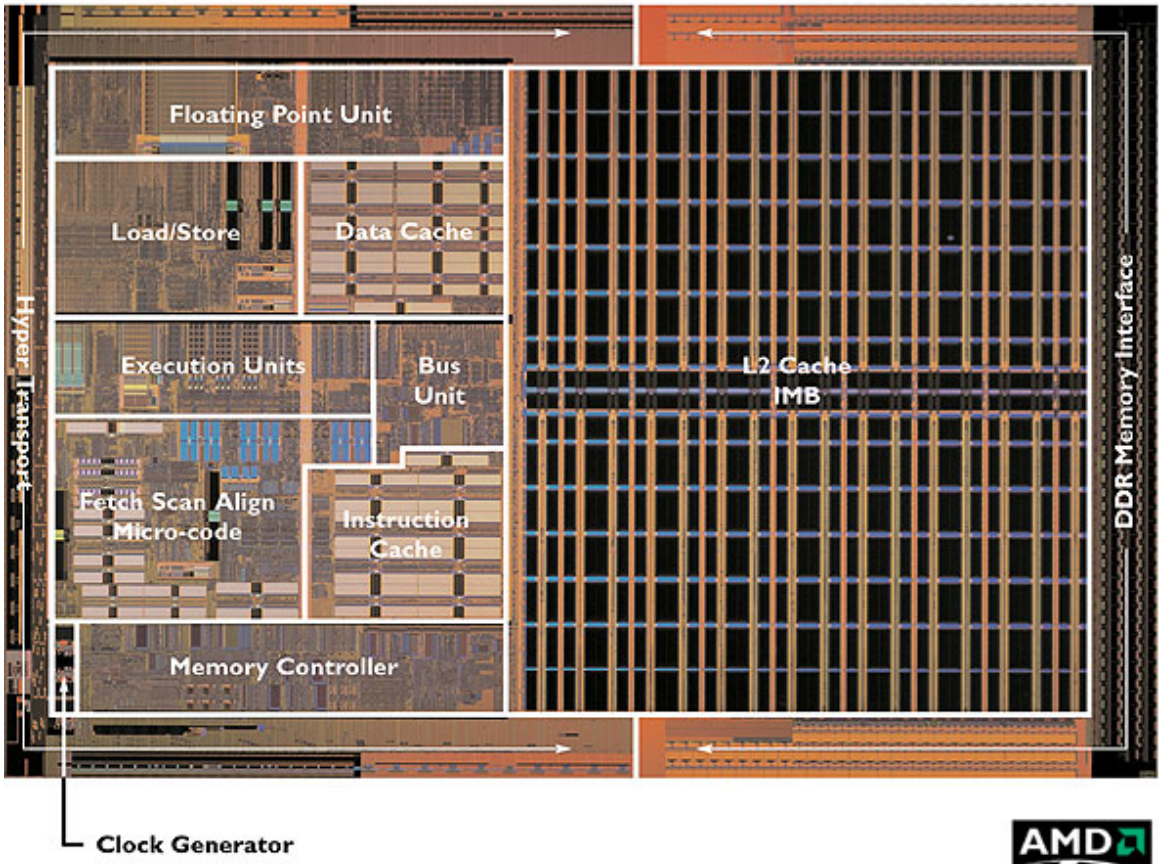

Image: approx 2004 AMD press image of Opteron die

2004 CPU

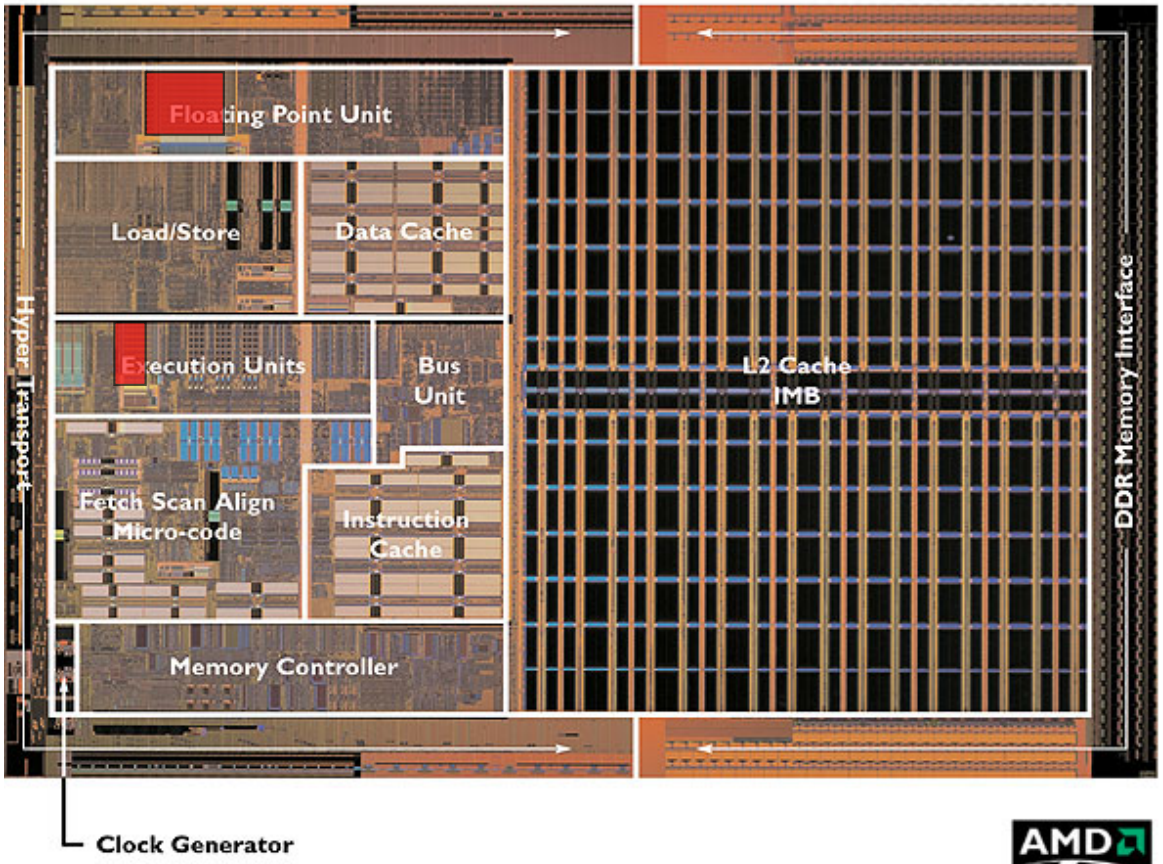

Registers

Image: approx 2004 AMD press image of Opteron die

2004 CPU

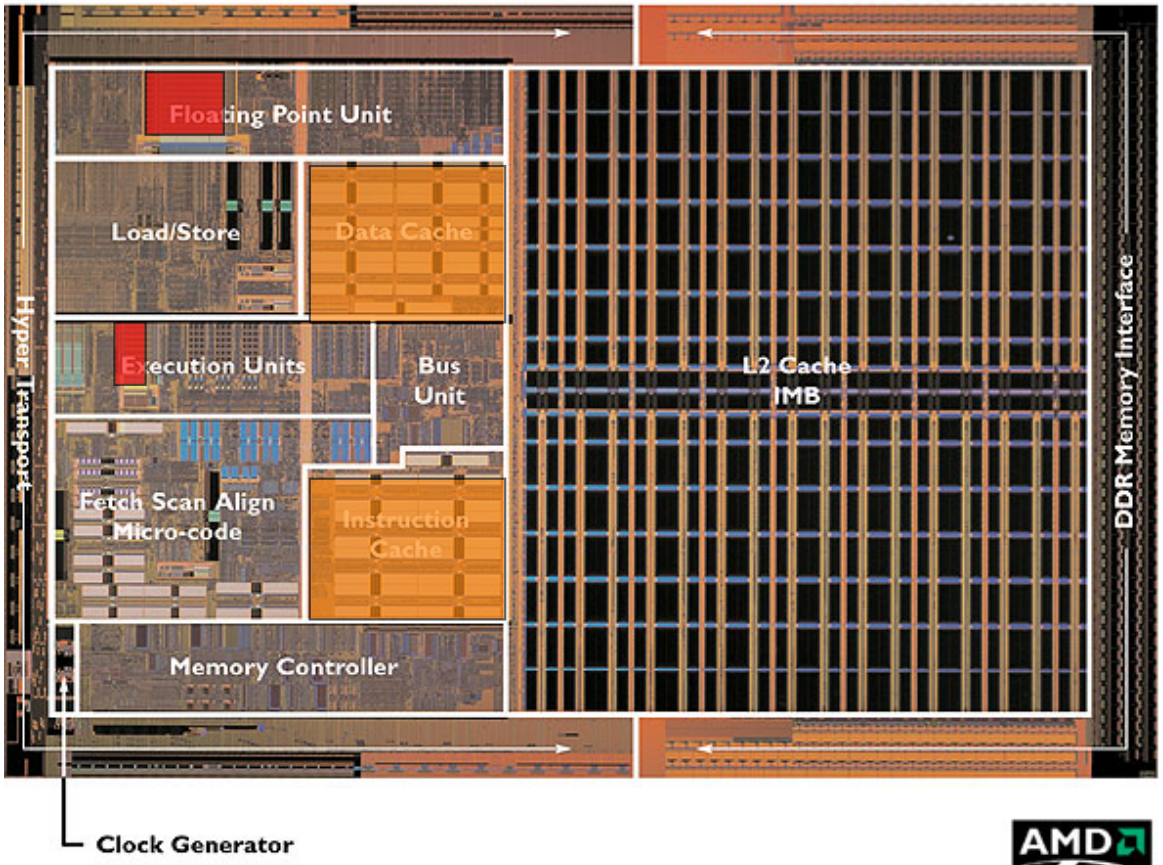

Image: approx 2004 AMD press image of Opteron die

2004 CPU

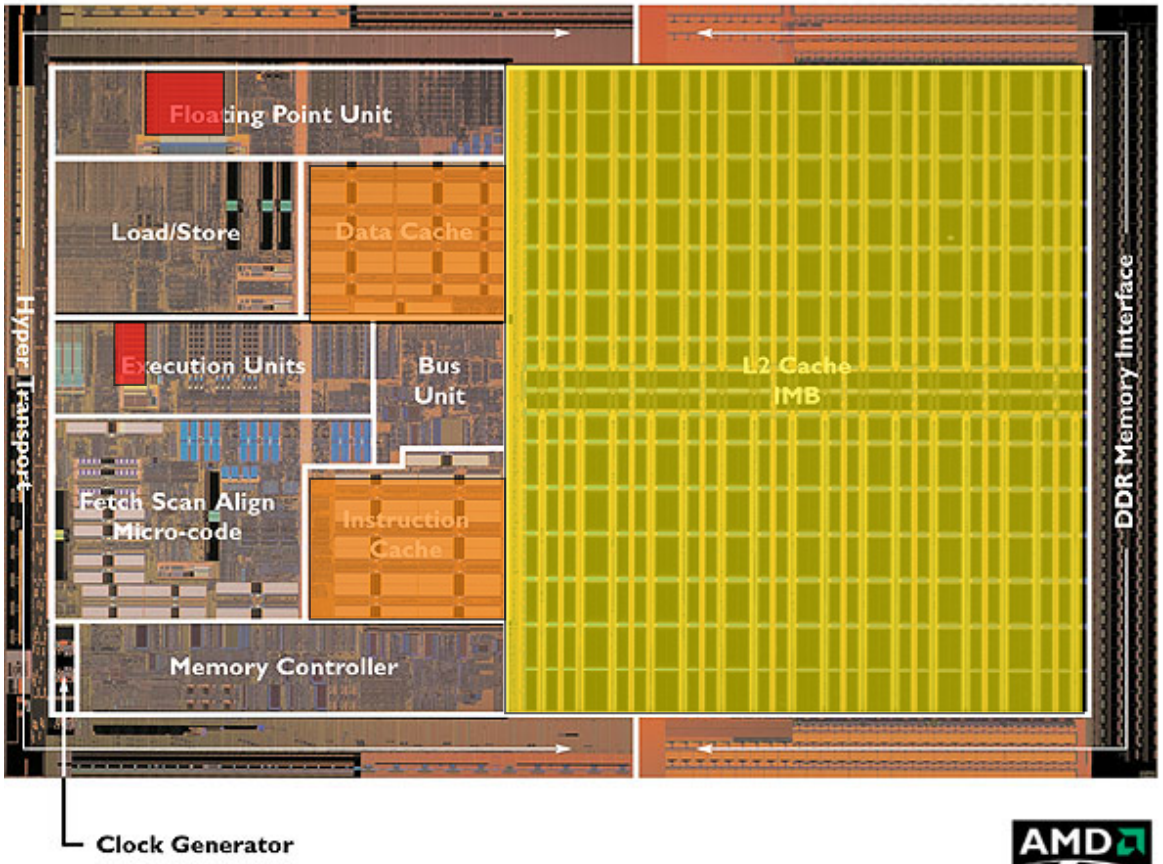

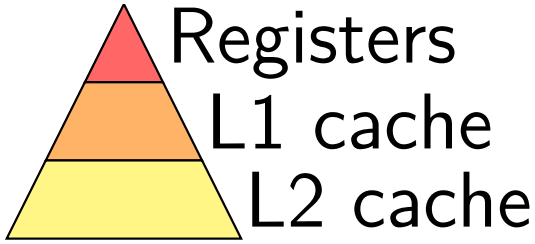

Image: approx 2004 AMD press image of Opteron die

2004 CPU

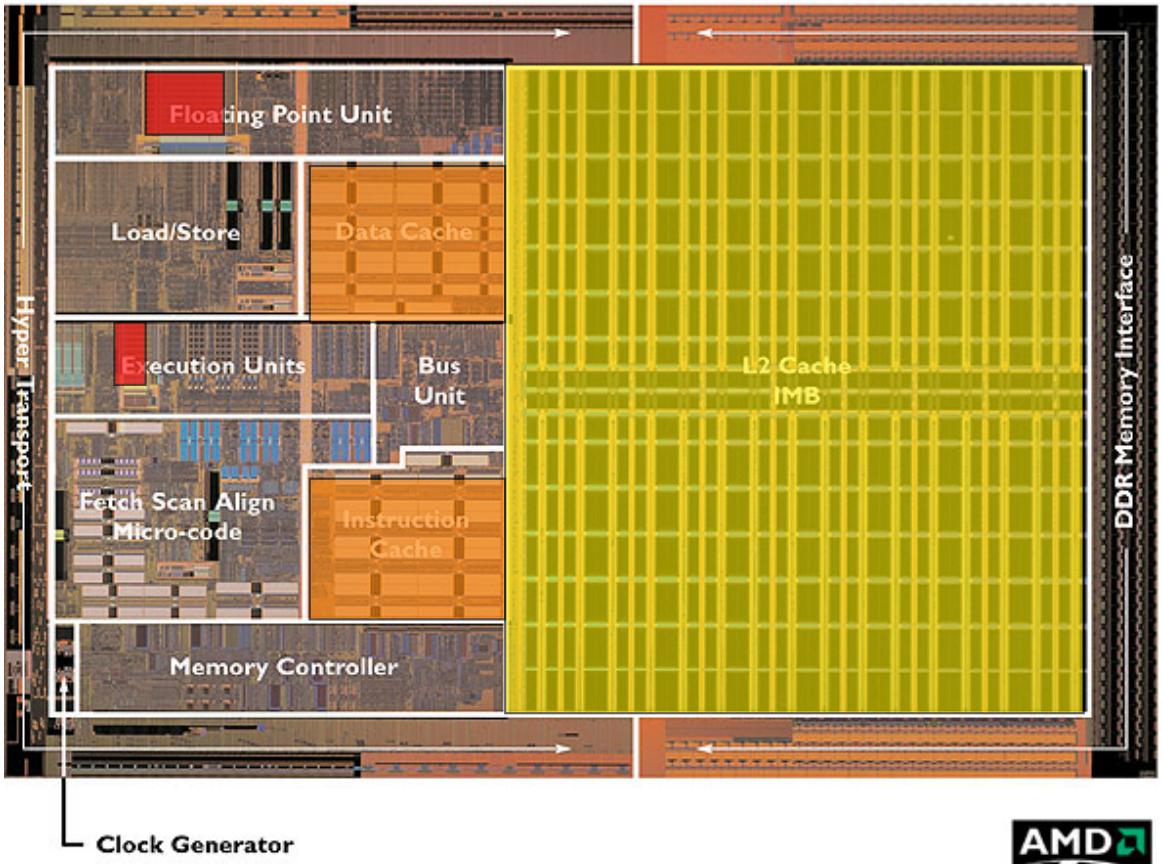

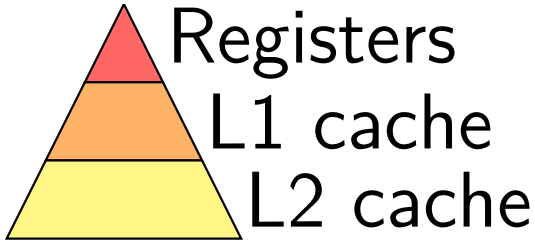

Image: approx 2004 AMD press image of Opteron die

2004 CPU

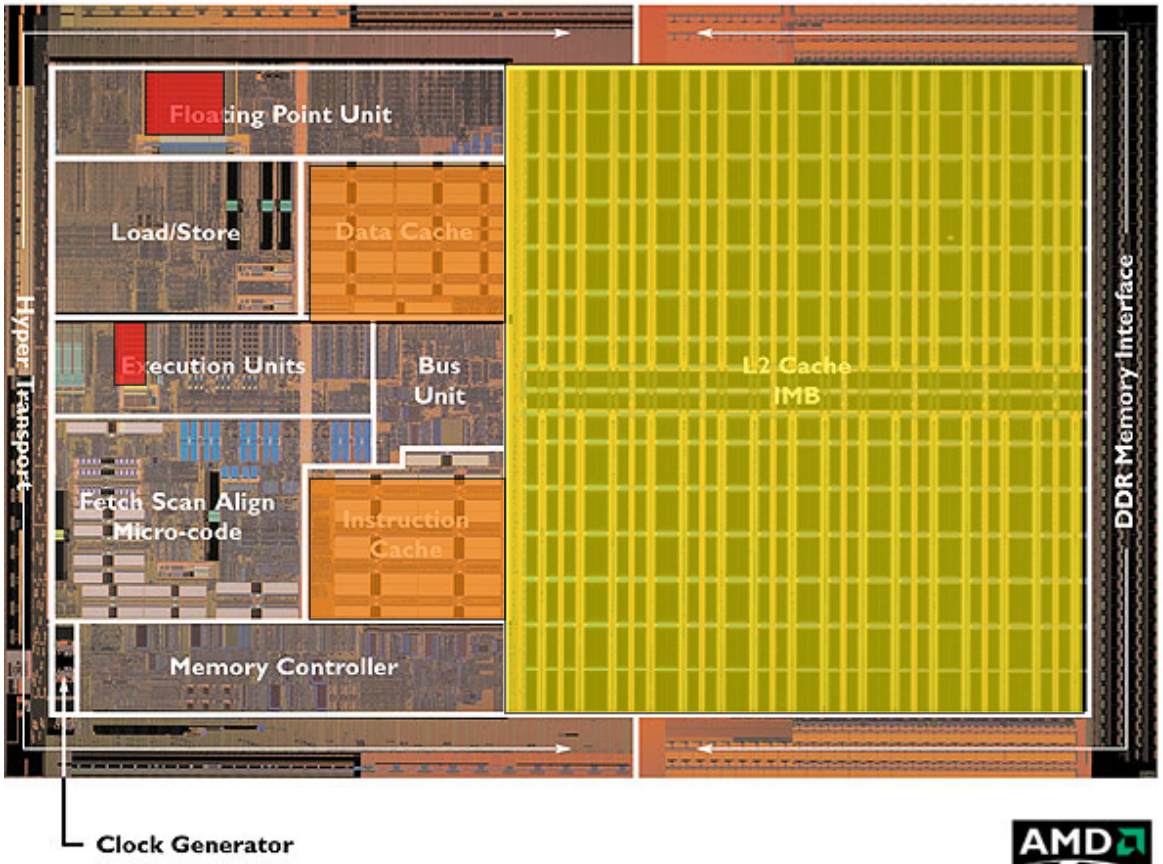

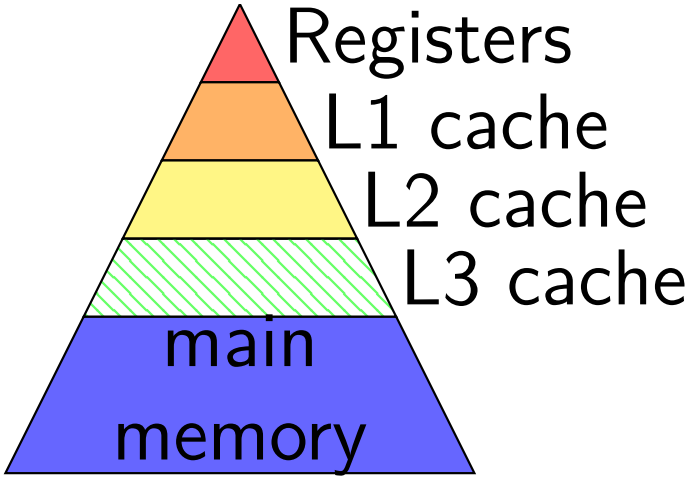

Image: approx 2004 AMD press image of Opteron die

2004 CPU

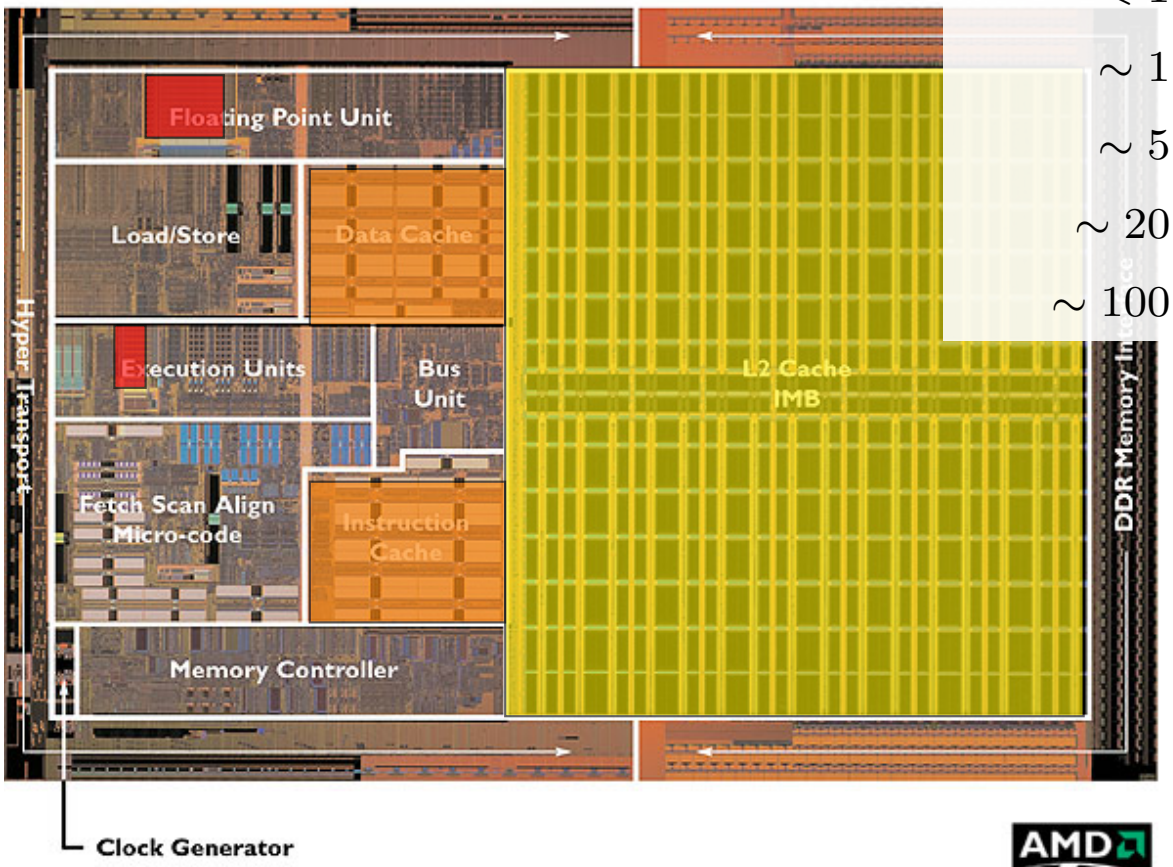

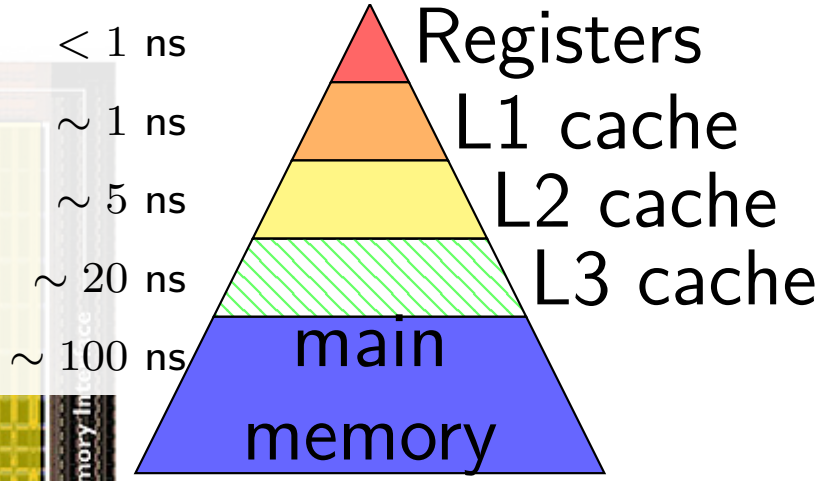

Image: approx 2004 AMD press image of Opteron die

cache: real memory

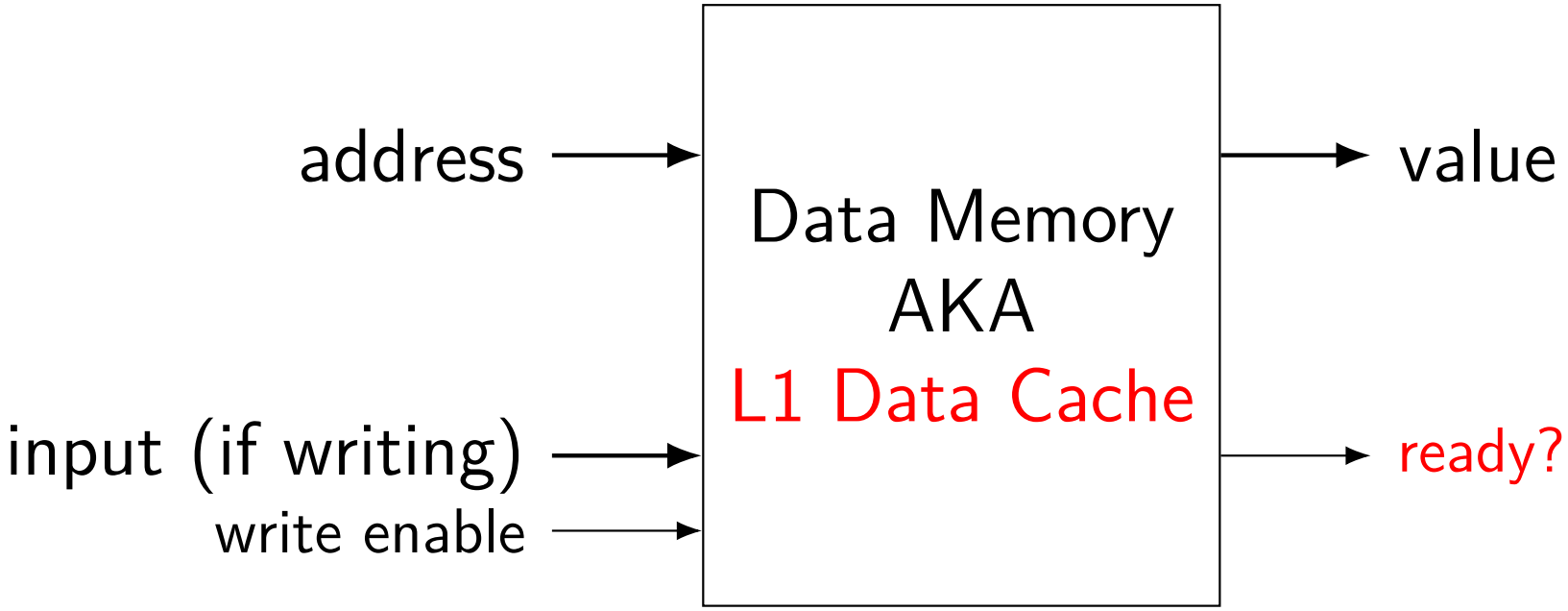

cache: real memory

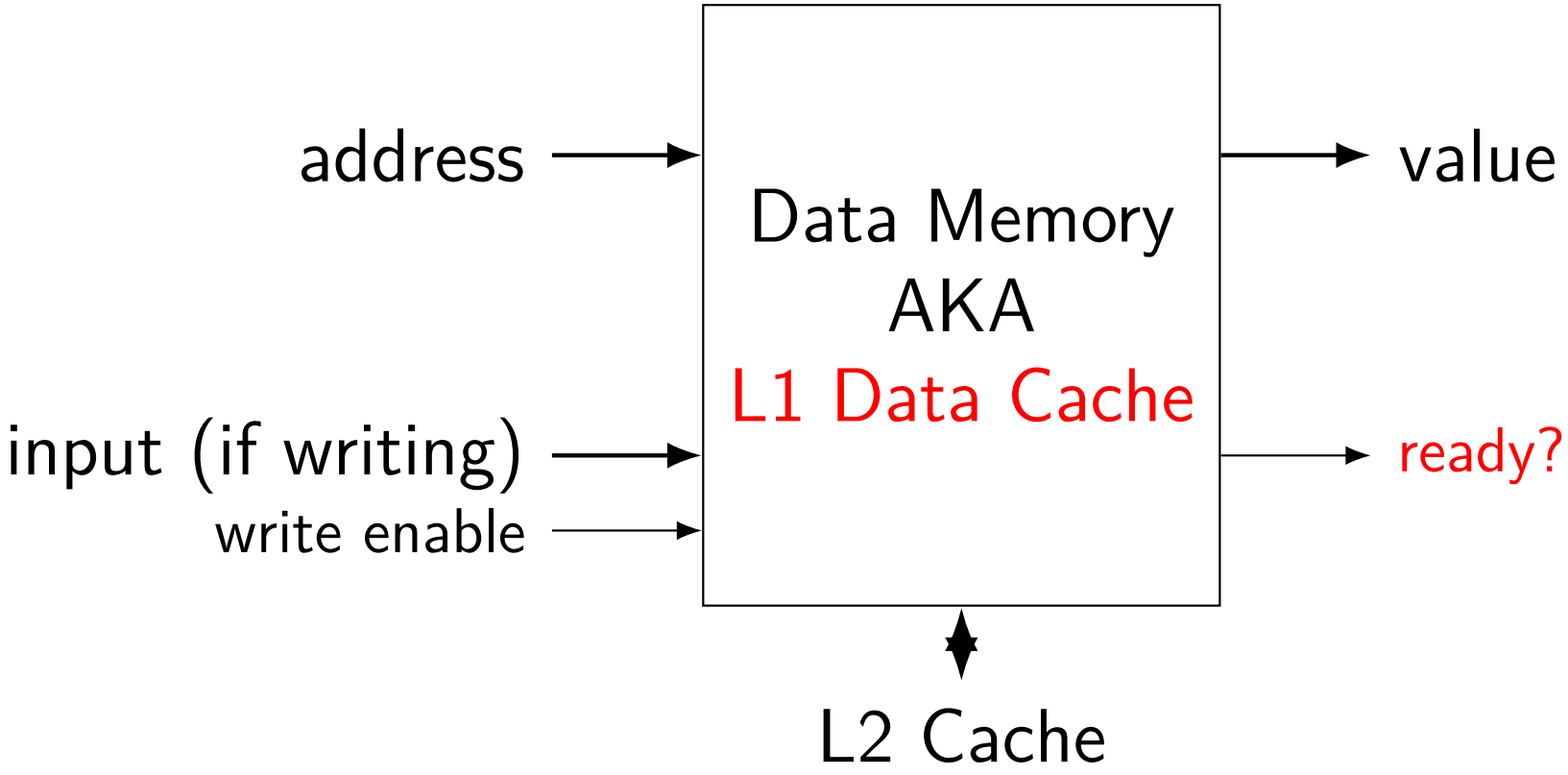

the place of cache

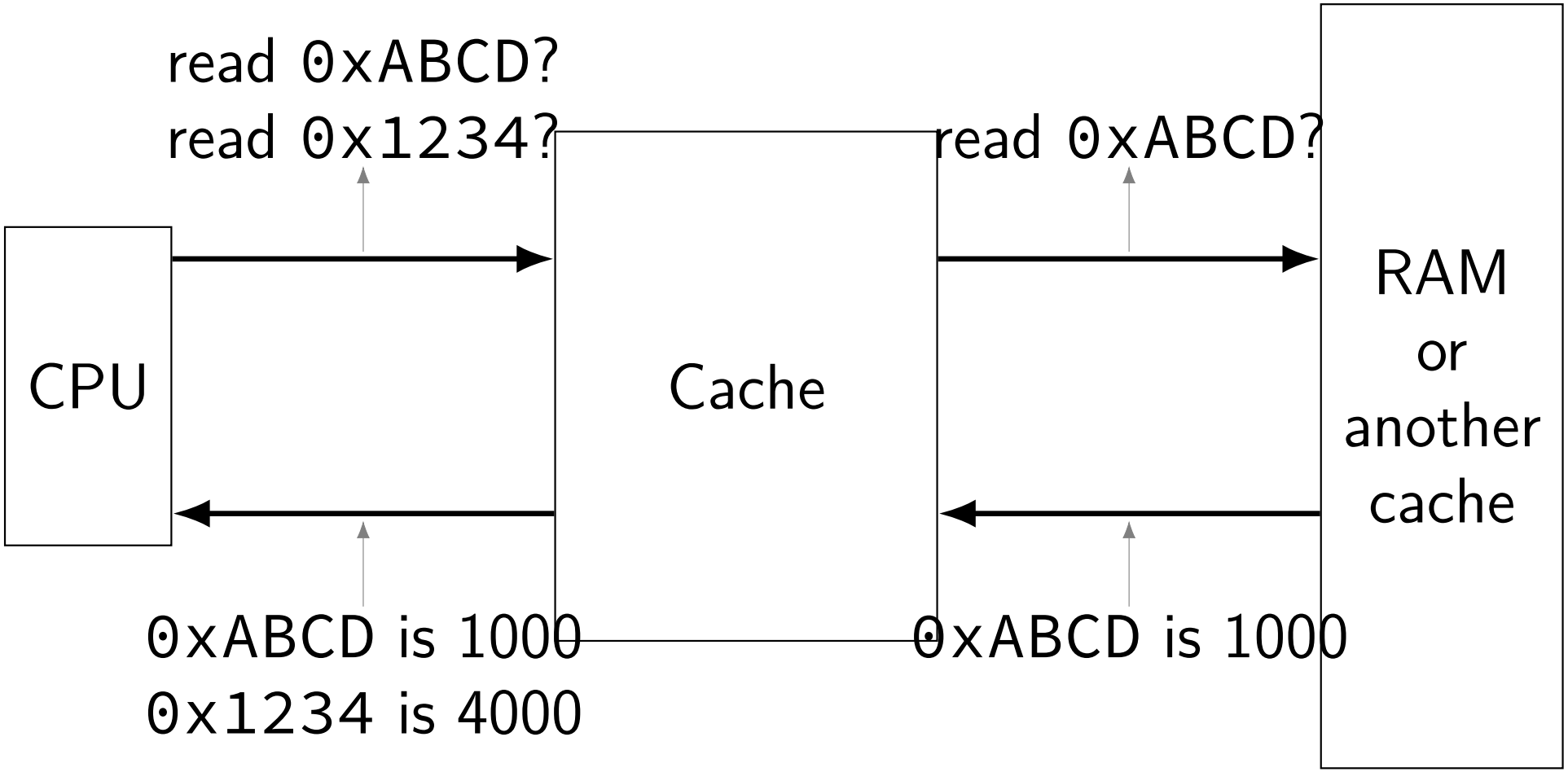

memory hierarchy goals

performance of the fastest memory

- hide 100x latency difference? 99+% hit rate

capacity of the largest memory

building a (direct-mapped) cache

Cache

value
00 00
00 00
00 00
00 00

cache block: 2 bytes

Memory

addresses	bytes
00000–00001	00 11
00010–00011	22 33
00100–00101	55 55
00110–00111	66 77
01000–01001	88 99
01010–01011	AA BB
01100–01101	CC DD
01110–01111	EE FF
10000–10001	F0 F1
...	...

building a (direct-mapped) cache

read byte at 01011?

Cache

value
00 00
00 00
00 00
00 00

cache block: 2 bytes

Memory

addresses	bytes
00000–00001	00 11
00010–00011	22 33
00100–00101	55 55
00110–00111	66 77
01000–01001	88 99
01010–01011	AA BB
01100–01101	CC DD
01110–01111	EE FF
10000–10001	F0 F1
...	...

building a (direct-mapped) cache

read byte at 01011?

exactly one place for each address
spread out what can go in a block

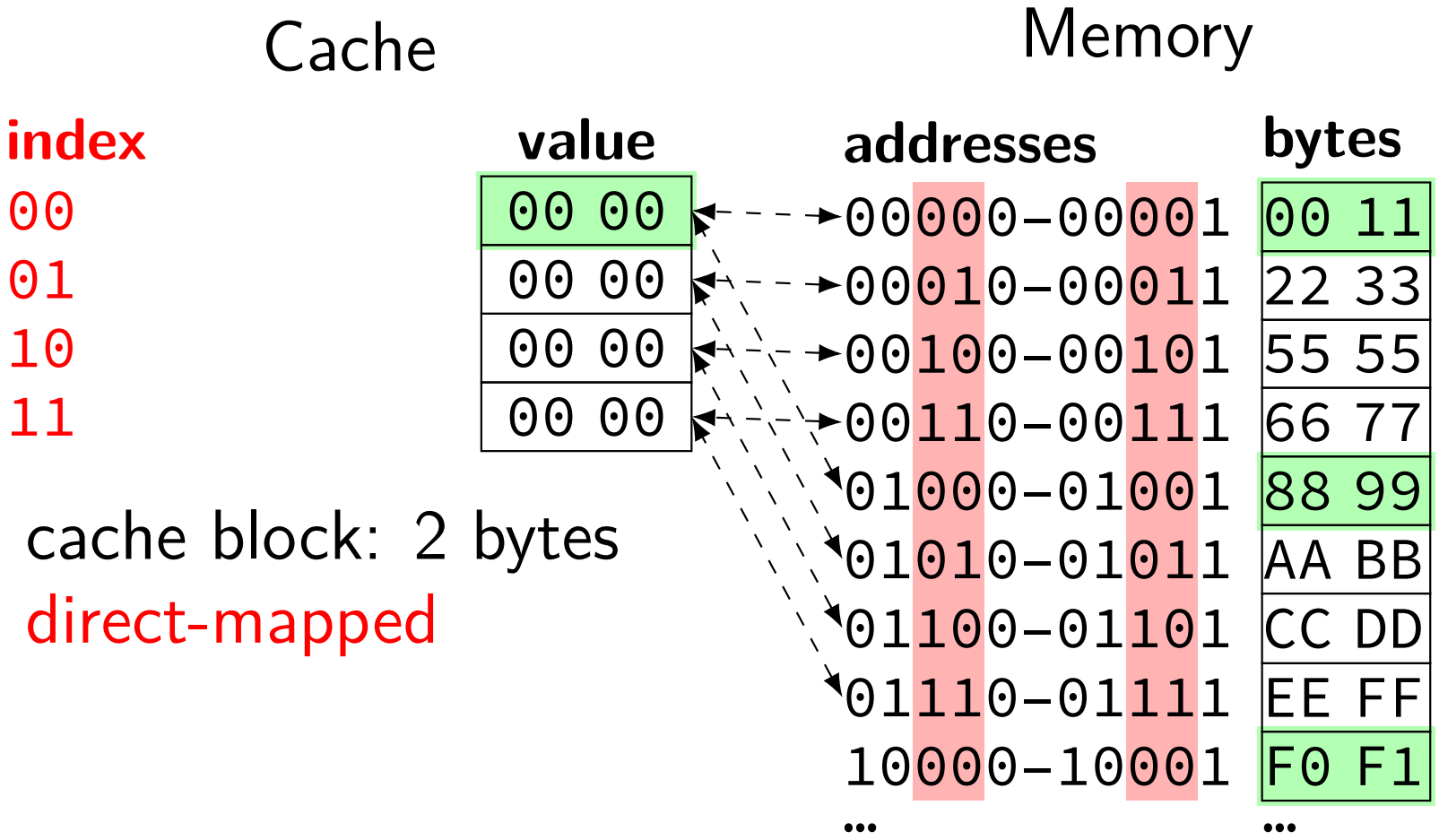

cache block: 2 bytes

direct-mapped

building a (direct-mapped) cache

read byte at 01011?

exactly one place for each address
spread out what can go in a block

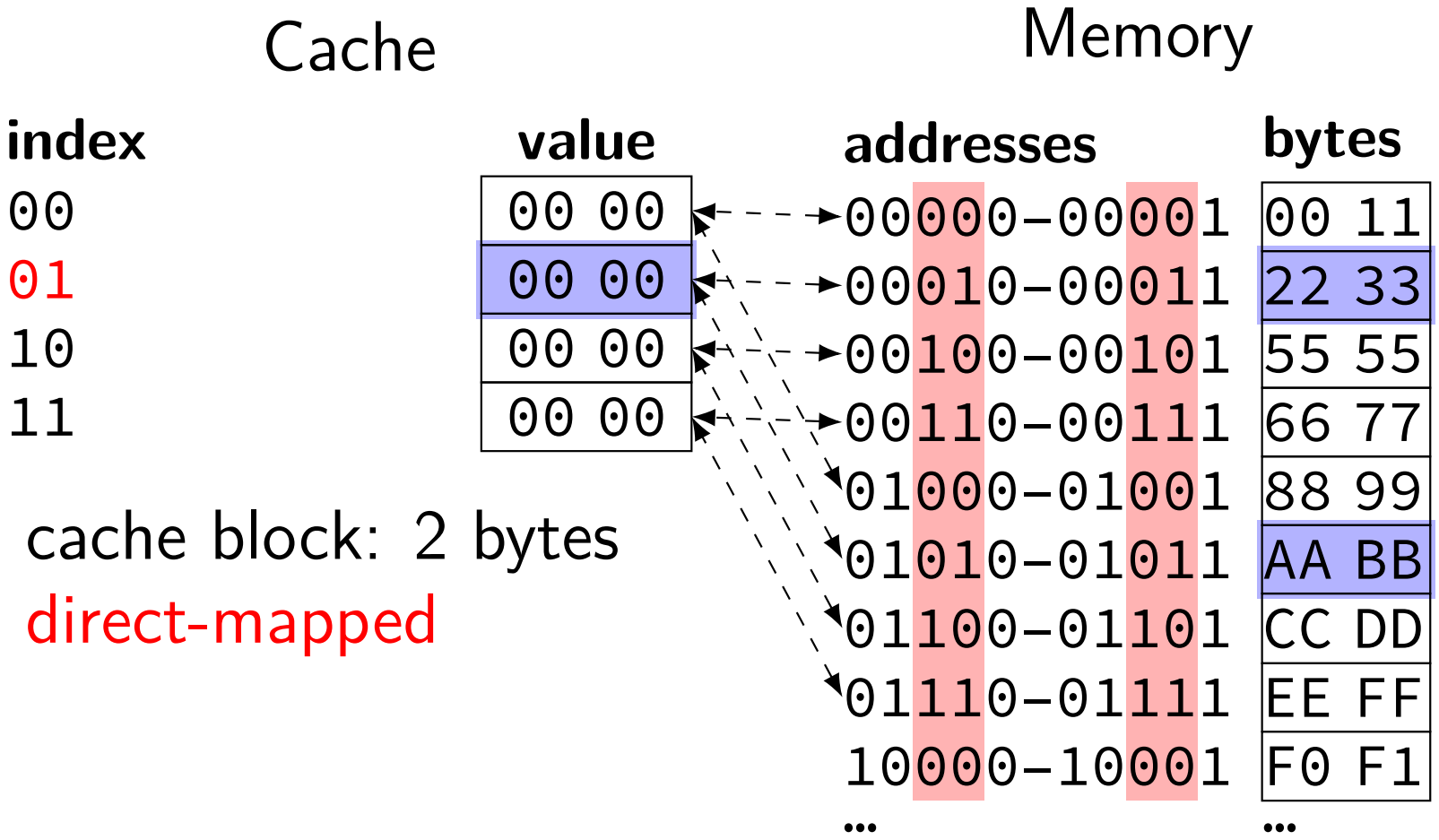

cache block: 2 bytes

direct-mapped

building a (direct-mapped) cache

read byte at 01011?

exactly one place for each address
spread out what can go in a block

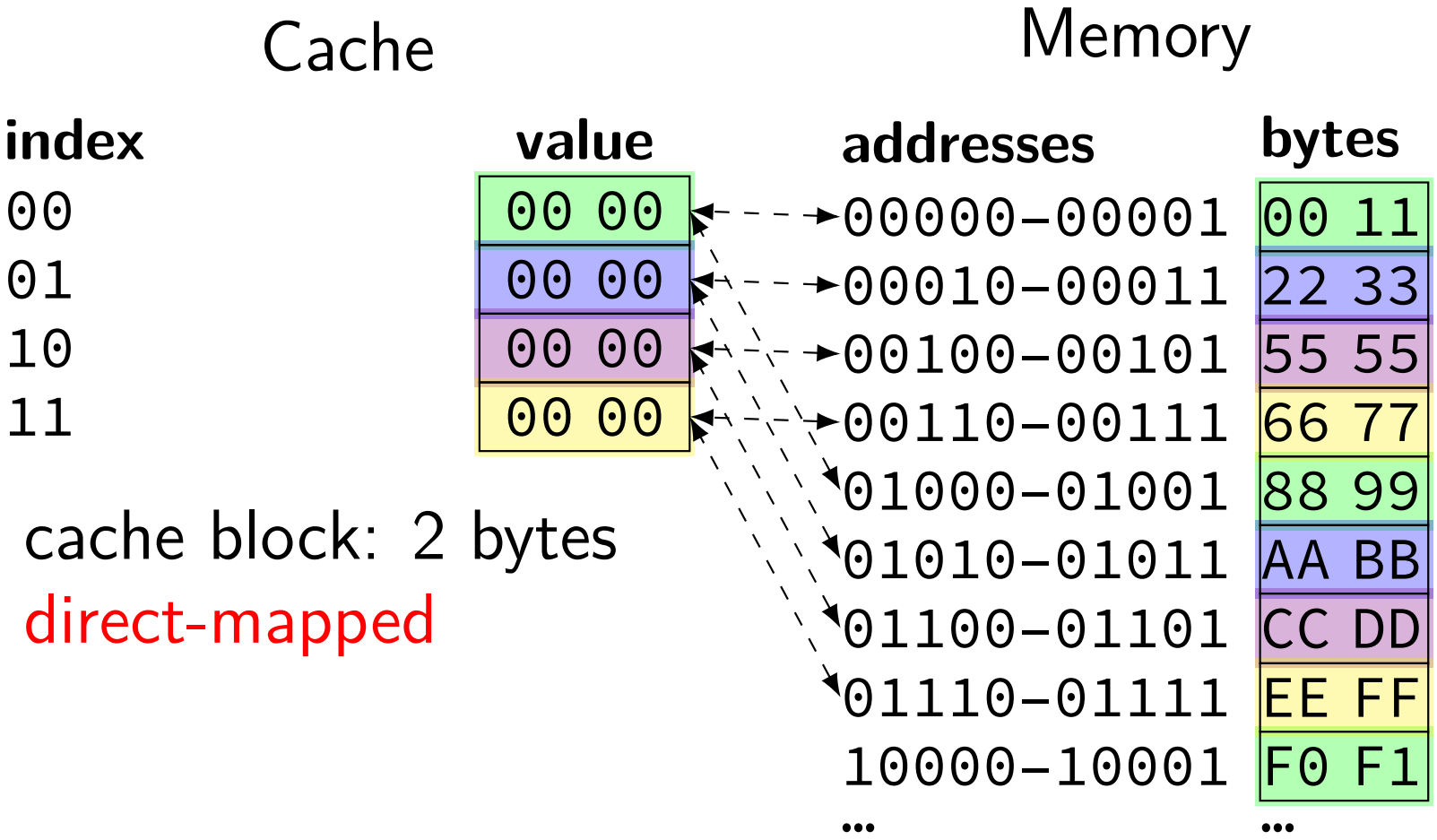

cache block: 2 bytes

direct-mapped

building a (direct-mapped) cache

read byte at 01011?

Cache

index	valid	value
00	0	00 00
01	0	00 00
10	0	00 00
11	0	00 00

Memory

addresses	bytes
00010–00011	22 33
00100–00101	55 55
00110–00111	66 77
01000–01001	88 99
01010–01011	AA BB
01100–01101	CC DD
01110–01111	EE FF
10000–10001	F0 F1
…	…

is this even a value?

need extra bit to know

cache block: 2 bytes

direct-mapped

building a (direct-mapped) cache

read byte at 01011?
invalid, fetch

Cache

index	valid	value
00	0	00 00
01	1	AA BB
10	0	00 00
11	0	00 00

cache block: 2 bytes
direct-mapped

Memory

addresses	bytes
00000–00001	00 11
00010–00011	22 33
00100–00101	55 55
00110–00111	66 77
01000–01001	88 99
01010–01011	AA BB
01100–01101	CC DD
01110–01111	EE FF
10000–10001	F0 F1
...	...

building a (direct-mapped) cache

read byte at 01011?
invalid, fetch

Cache

index	valid	tag	value
00	0	00	00 00
01	1	01	AA BB
10	0	00	00 00
11	0		

need tag to know

cache block: 2 bytes
direct-mapped

Memory

value from 01010 or 00010?

addresses	bytes
00000–00001	00 11
00010–00011	22 33
00100–00101	55 55
00110–00111	66 77
01000–01001	88 99
01010–01011	AA BB
01100–01101	CC DD
01110–01111	EE FF
10000–10001	F0 F1
...	...

building a (direct-mapped) cache

read byte at 01011?
invalid, fetch

Cache

index	valid	tag	value
00	0	00	00 00
01	1	01	AA BB
10	0	00	00 00
11	0	00	00 00

cache block: 2 bytes
direct-mapped

Memory

addresses	bytes
00000–00001	00 11
00010–00011	22 33
00100–00101	55 55
00110–00111	66 77
01000–01001	88 99
01010–01011	AA BB
01100–01101	CC DD
01110–01111	EE FF
10000–10001	F0 F1
...	...

cache operation (read)

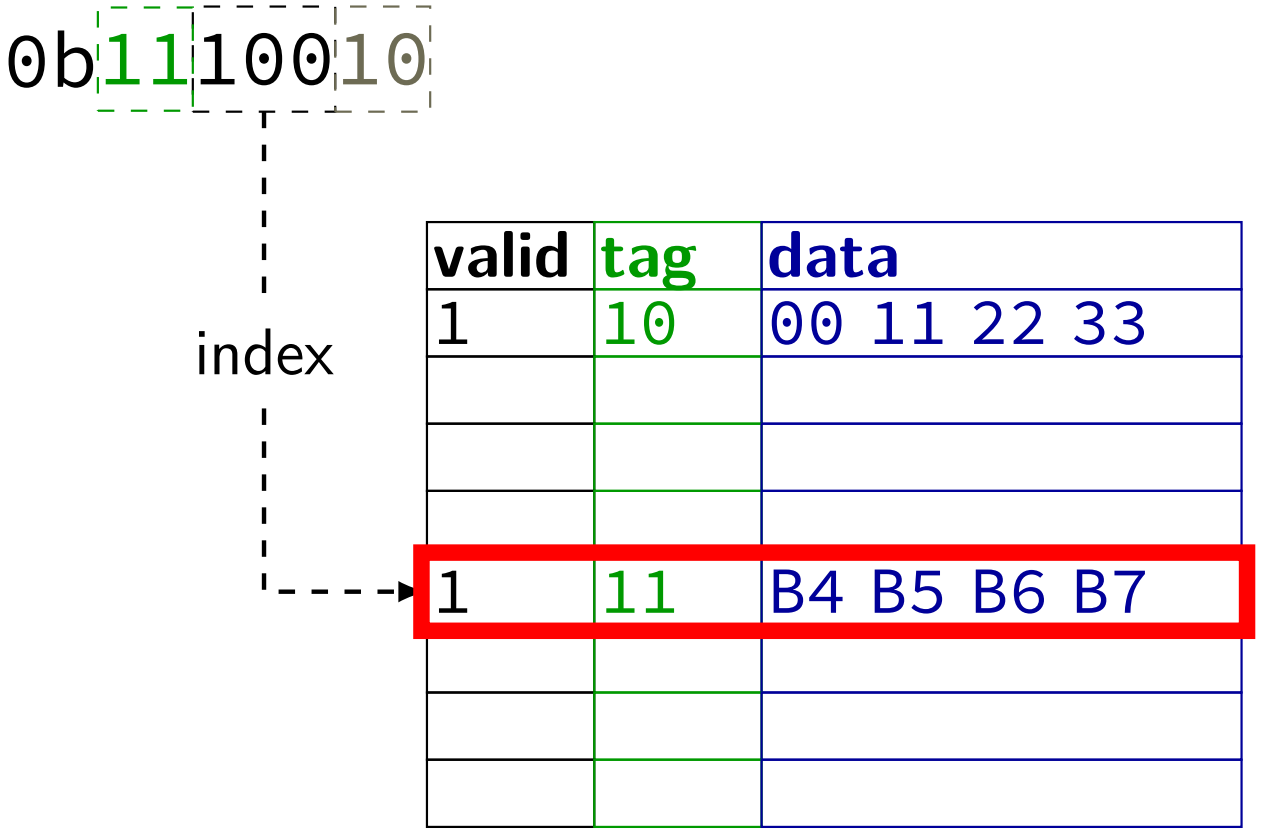

cache operation (read)

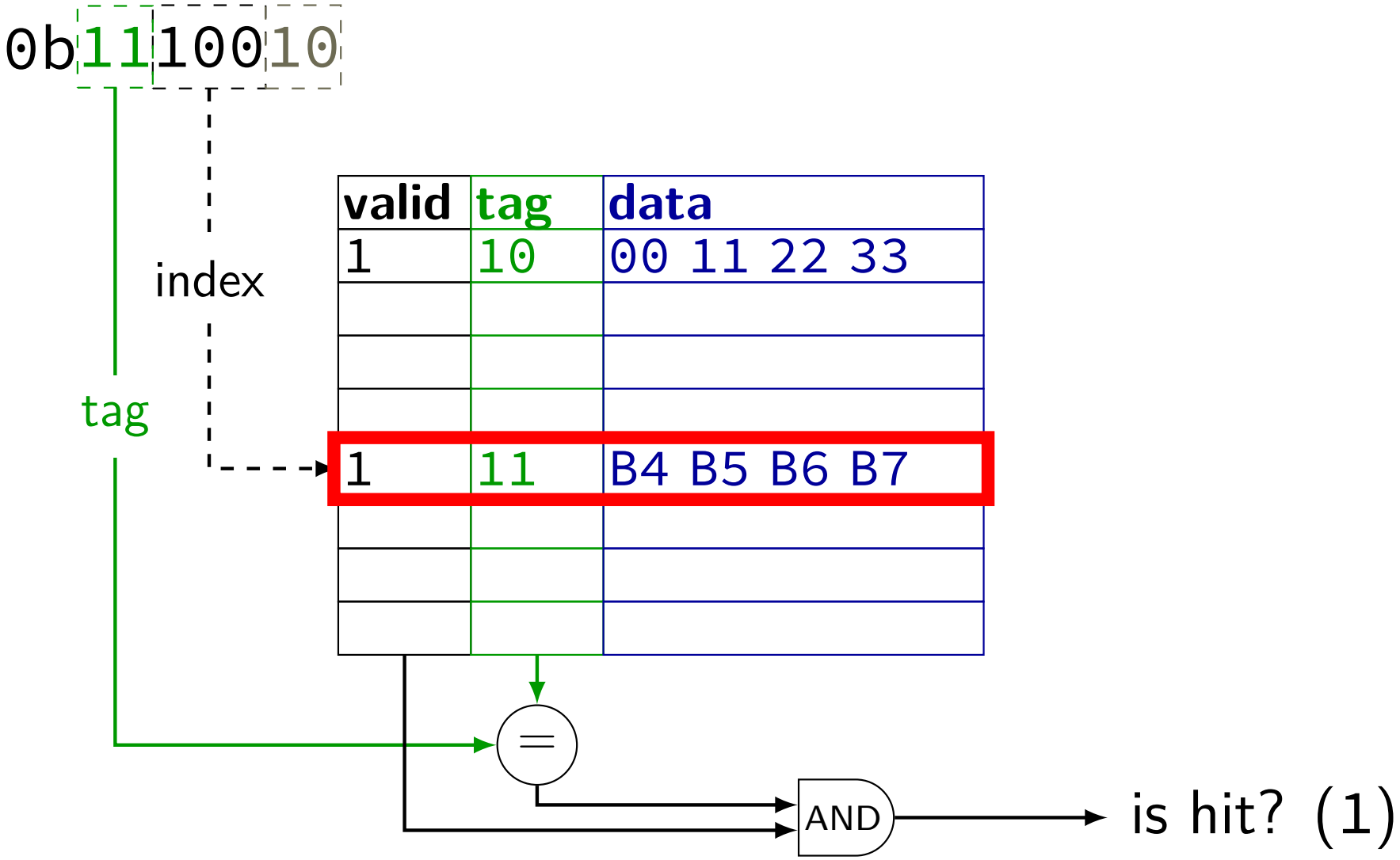

cache operation (read)

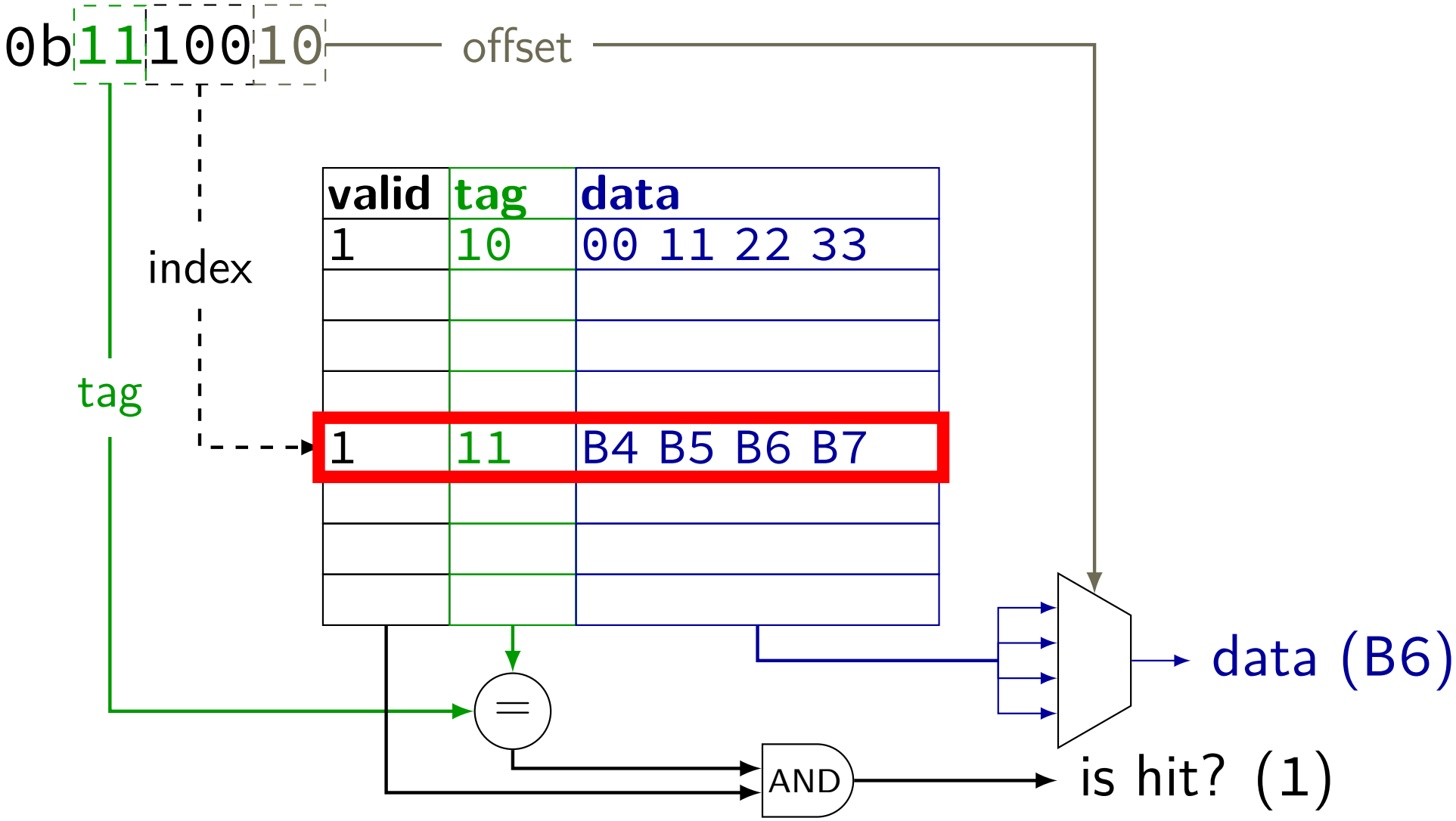

Tag-Index-Offset (TIO)

address `001111` = `FF`

cache	tag	index	offset
2 byte blocks, 4 sets	???	???	???
2 byte blocks, 8 sets	???	???	???
4 byte blocks, 2 sets	???	???	???

2 byte blocks, 4 sets

index	valid	tag	value
00	1	000	00 11
01	1	001	AA BB
10	0	--	-- --
11	1	001	EE FF

4 byte blocks, 2 sets

index	valid	tag	value
0	1	00	00 11 22 33
1	1	01	CC DD EE FF

2 byte blocks, 8 sets

index	valid	tag	value
000	1	00	00 11
001	1	01	F1 F2
010	0	--	-- --
011	0	--	-- --
100	0	--	-- --
101	1	00	AA BB
110	0	--	-- --
111	1	00	EE FF

Tag-Index-Offset (TIO)

address `001111` = `FF`

cache	tag	index	offset
2 byte blocks, 4 sets	???	???	1
2 byte blocks, 8 sets	???	???	1
4 byte blocks, 2 sets	???	???	???

2 byte blocks, 4 sets

index	valid	tag	value
00	1	000	00 11
01	1	001	AA BB
10	0	--	-- --
11	1	001	EE FF

4 byte blocks, 2 sets

index	valid	tag	value
0	1	00	00 11 22 33
1	1	01	CC DD EE FF

2 byte blocks, 8 sets

index	valid	tag	value
			00 11
			F1 F2
			-- --
011	0	--	-- --
100	0	--	-- --
101	1	00	AA BB
110	0	--	-- --
111	1	00	EE FF

$2 = 2^1$ bytes in block
1 bit to say which byte

Tag-Index-Offset (TIO)

address `001111` = `FF`

cache	tag	index	offset
2 byte blocks, 4 sets	???	???	1
2 byte blocks, 8 sets	???	???	1
4 byte blocks, 2 sets	???	???	11

2 byte blocks, 4 sets

index	valid	tag	value
00	1	000	00 11
01	1	001	AA BB
10	0		
11	1		

4 byte

index	valid	tag	value
0	1	00	00 11 22 33
1	1	01	CC DD EE FF

$4 = 2^2$ bytes in block
2 bits to say which byte

2 byte blocks, 8 sets

index	valid	tag	value
000	1	00	00 11
001	1	01	F1 F2
010	0	--	-- --
011	0	--	-- --
100	0	--	-- --
101	1	00	AA BB
110	0	--	-- --
111	1	00	EE FF

Tag-Index-Offset (TIO)

address `001111` = `FF`

cache	tag	index	offset
2 byte blocks, 4 sets	???	11	1
2 byte blocks, 8 sets	???		1
4 byte blocks, 2 sets	???	1	11

2 byte blocks, 4 sets

index	valid	tag	value
00	1	000	00 11
01	1	001	AA BB
10	0	--	-- --
11	1	001	EE FF

4 byte blocks, 2 sets

index	valid	tag	value
0	1	00	00 11 22 33
1	1	01	CC DD EE FF

2 byte blocks, 8 sets

index	valid	tag	value
000	1	00	00 11
001	1	00	F1 F2
010	0	--	-- --
011	0	--	-- --
100	0	--	-- --
101	1	00	AA BB
110	0	--	-- --
111	1	00	EE FF

$2^2 = 4$ sets

2 bits to index set

Tag-Index-Offset (TIO)

address `001111` = `FF`

cache	tag	index	offset
2 byte blocks, 4 sets	???	11	1
2 byte blocks, 8 sets	???	111	1
4 byte blocks, 2 sets	???	1	11

2 byte blocks, 4 sets

index	valid	tag	value
00	1	000	00 11
01	1	001	AA BB
10	0	--	-- --
11	1		

4

index	valid	tag	value
0	1	00	00 11 22 33
1	1	01	CC DD EE FF

$2^3 = 8$ sets

3 bits to index set

2 byte blocks, 8 sets

index	valid	tag	value
000	1	00	00 11
001	1	01	F1 F2
010	0	--	-- --
011	0	--	-- --
100	0	--	-- --
101	1	00	AA BB
110	0	--	-- --
111	1	00	EE FF

Tag-Index-Offset (TIO)

address `001111` = `FF`

cache	tag	index	offset
2 byte blocks, 4 sets	???	11	1
2 byte blocks, 8 sets	???	111	1
4 byte blocks, 2 sets	???	1	11

2 byte blocks, 4 sets

index	valid	tag	value
00	1	000	00 11
01	1	001	AA BB
10	0	--	-- --
11	1	001	EE FF

4 byte blocks, 2 sets

index	valid	tag	value
0	1	00	00 11 22 33
1	1	01	CC DD EE FF

2 byte blocks, 8 sets

index	valid	tag	value
000	1	00	00 11
001	1	01	F1 F2
010	0	--	-- --
01			--
10			--
10			BB
110	0	--	-- --
111	1	00	EE FF

$2^1 = 2$ sets

1 bit to index set

Tag-Index-Offset (TIO)

address `001111` = `FF`

cache	tag	index	offset
2 byte blocks, 4 sets	001	11	1
2 byte blocks, 8 sets	00	111	1
4 byte blocks, 2 sets	001	1	11

tag — whatever is left over

00	1	000	00 11
01	1	001	AA BB
10	0	--	-- --
11	1	001	EE FF

4 byte blocks, 2 sets

index	valid	tag	value
0	1	00	00 11 22 33
1	1	01	CC DD EE FF

2 byte blocks, 8 sets

index	valid	tag	value
000	1	00	00 11
001	1	01	F1 F2
010	0	--	-- --
011	0	--	-- --
100	0	--	-- --
101	1	00	AA BB
110	0	--	-- --
111	1	00	EE FF

Tag-Index-Offset formulas

m	memory addreses bits (Y86-64: 64)
$S = 2^s$	number of sets
s	(set) index bits
$B = 2^b$	block size
b	(block) offset bits
$t = m - (s + b)$	tag bits
$C = B \times S$	cache size (if direct-mapped)

example access pattern (1)

address (hex)	result
00000000 (00)	
00000001 (01)	
01100011 (63)	
01100001 (61)	
01100010 (62)	
00000000 (00)	
01100100 (64)	

2 byte blocks, 4 sets

index	valid	tag	value
00	0		
01	0		
10	0		
11	0		

example access pattern (1)

address (hex)	result
00000000 (00)	
00000001 (01)	
01100011 (63)	
01100001 (61)	
01100010 (62)	
00000000 (00)	
01100100 (64)	

2 byte blocks, 4 sets

index	valid	tag	value
00	0		
01	0		
10	0		
11	0		

$m = 8$ bit addresses
$S = 4 = 2^s$ sets
$s = 2$ (set) index bits

$B = 2 = 2^b$ byte block size
$b = 1$ (block) offset bits
$t = m - (s + b) = 5$ tag bits

example access pattern (1)

address (hex)	result
00000000 (00)	
00000001 (01)	
01100011 (63)	
01100001 (61)	
01100010 (62)	
00000000 (00)	
01100100 (64)	

tag index offset

2 byte blocks, 4 sets

index	valid	tag	value
00	0		
01	0		
10	0		
11	0		

$m = 8$ bit addresses
$S = 4 = 2^s$ sets
$s = 2$ (set) index bits

$B = 2 = 2^b$ byte block size
$b = 1$ (block) offset bits
$t = m - (s + b) = 5$ tag bits

example access pattern (1)

address (hex)	result
00000000 (00)	miss
00000001 (01)	
01100011 (63)	
01100001 (61)	
01100010 (62)	
00000000 (00)	
01100100 (64)	

tag index offset

2 byte blocks, 4 sets

index	valid	tag	value
00	1	00000	mem[0x00] mem[0x01]
01	0		
10	0		
11	0		

$m = 8$ bit addresses
$S = 4 = 2^s$ sets
$s = 2$ (set) index bits

$B = 2 = 2^b$ byte block size
$b = 1$ (block) offset bits
$t = m - (s + b) = 5$ tag bits

example access pattern (1)

address (hex)	result
00000000 (00)	miss
00000001 (01)	hit
01100011 (63)	
01100001 (61)	
01100010 (62)	
00000000 (00)	
01100100 (64)	

tag index offset

2 byte blocks, 4 sets

index	valid	tag	value
00	1	00000	mem[0x00] mem[0x01]
01	0		
10	0		
11	0		

$m = 8$ bit addresses
$S = 4 = 2^s$ sets
$s = 2$ (set) index bits

$B = 2 = 2^b$ byte block size
$b = 1$ (block) offset bits
$t = m - (s + b) = 5$ tag bits

example access pattern (1)

address (hex)	result
00000000 (00)	miss
00000001 (01)	hit
01100011 (63)	miss
01100001 (61)	
01100010 (62)	
00000000 (00)	
01100100 (64)	

tag index offset

2 byte blocks, 4 sets

index	valid	tag	value
00	1	00000	mem[0x00] mem[0x01]
01	1	01100	mem[0x62] mem[0x63]
10	0		
11	0		

$m = 8$ bit addresses
$S = 4 = 2^s$ sets
$s = 2$ (set) index bits

$B = 2 = 2^b$ byte block size
$b = 1$ (block) offset bits
$t = m - (s + b) = 5$ tag bits

example access pattern (1)

address (hex)	result
00000000 (00)	miss
00000001 (01)	hit
01100011 (63)	miss
01100001 (61)	miss
01100010 (62)	
00000000 (00)	
01100100 (64)	

tag index offset

2 byte blocks, 4 sets

index	valid	tag	value
00	1	01100	mem[0x60] mem[0x61]
01	1	01100	mem[0x62] mem[0x63]
10	0		
11	0		

$m = 8$ bit addresses

$S = 4 = 2^s$ sets

$s = 2$ (set) index bits

$B = 2 = 2^b$ byte block size

$b = 1$ (block) offset bits

$t = m - (s + b) = 5$ tag bits

example access pattern (1)

address (hex)	result
00000000 (00)	miss
00000001 (01)	hit
01100011 (63)	miss
01100001 (61)	miss
01100010 (62)	hit
00000000 (00)	
01100100 (64)	

tag index offset

2 byte blocks, 4 sets

index	valid	tag	value
00	1	01100	mem[0x60] mem[0x61]
01	1	01100	mem[0x62] mem[0x63]
10	0		
11	0		

$m = 8$ bit addresses
$S = 4 = 2^s$ sets
$s = 2$ (set) index bits

$B = 2 = 2^b$ byte block size
$b = 1$ (block) offset bits
$t = m - (s + b) = 5$ tag bits

example access pattern (1)

address (hex)	result
00000000 (00)	miss
00000001 (01)	hit
01100011 (63)	miss
01100001 (61)	miss
01100010 (62)	hit
00000000 (00)	miss
01100100 (64)	

tag index offset

2 byte blocks, 4 sets

index	valid	tag	value
00	1	00000	mem[0x00] mem[0x01]
01	1	01100	mem[0x62] mem[0x63]
10	0		
11	0		

$m = 8$ bit addresses

$S = 4 = 2^s$ sets

$s = 2$ (set) index bits

$B = 2 = 2^b$ byte block size

$b = 1$ (block) offset bits

$t = m - (s + b) = 5$ tag bits

example access pattern (1)

address (hex)	result
00000000 (00)	miss
00000001 (01)	hit
01100011 (63)	miss
01100001 (61)	miss
01100010 (62)	hit
00000000 (00)	miss
01100100 (64)	miss

tag index offset

2 byte blocks, 4 sets

index	valid	tag	value
00	1	00000	mem[0x00] mem[0x01]
01	1	01100	mem[0x62] mem[0x63]
10	1	01100	mem[0x64] mem[0x65]
11	0		

$m = 8$ bit addresses

$S = 4 = 2^s$ sets

$s = 2$ (set) index bits

$B = 2 = 2^b$ byte block size

$b = 1$ (block) offset bits

$t = m - (s + b) = 5$ tag bits

example access pattern (1)

address (hex)	result
00000000 (00)	miss
00000001 (01)	hit
01100011 (63)	miss
01100001 (61)	miss
01100010 (62)	hit
00000000 (00)	miss
01100100 (64)	miss

tag index offset

2 byte blocks, 4 sets

index	valid	tag	value
00	1	00000	mem[0x00] mem[0x01]
01	1	01100	mem[0x62] mem[0x63]
10	1	01100	mem[0x64] mem[0x65]
11	0		

$m = 8$ bit addresses
$S = 4 = 2^s$ sets
$s = 2$ (set) index bits

$B = 2 = 2^b$ byte block size
$b = 1$ (block) offset bits
$t = m - (s + b) = 5$ tag bits

example access pattern (1)

address (hex)	result
00000000 (00)	miss
00000001 (01)	hit
01100011 (63)	miss
01100001 (61)	miss
01100010 (62)	hit
00000000 (00)	miss
01100100 (64)	miss

tag index offset

2 byte blocks, 4 sets

index	valid	tag	value
00	1	00000	mem[0x00] mem[0x01]
01	1	01100	mem[0x62] mem[0x63]
10	1	01100	mem[0x64] [illegible]65]
11	0		

miss caused by conflict

$m = 8$ bit addresses
$S = 4 = 2^s$ sets
$s = 2$ (set) index bits

$B = 2 = 2^b$ byte block size
$b = 1$ (block) offset bits
$t = m - (s + b) = 5$ tag bits

adding associativity

2-way set associative, 2 byte blocks, 2 sets

index	valid	tag	value	valid	tag	value
0	0			0		
1	0			0		

adding associativity

2-way set associative, 2 byte blocks, 2 sets

index	valid	tag	value	valid	tag	value
0	0		set 0	0		
1	0		set 1	0		

adding associativity

2-way set associative, 2 byte blocks, 2 sets

index	valid	tag	value	valid	tag	value
0	0			0		
1	0			0		

$m = 8$ bit addresses
$S = 2 = 2^s$ sets
$s = 1$ (set) index bits

$B = 2 = 2^b$ byte block size
$b = 1$ (block) offset bits
$t = m - (s + b) = 6$ tag bits

adding associativity

2-way set associative, 2 byte blocks, 2 sets

index	valid	tag	value	valid	tag	value
0	0			0		
1	0			0		

address (hex)	result
00000000 (00)	
00000001 (01)	
01100011 (63)	
01100001 (61)	
01100010 (62)	
00000000 (00)	
01100100 (64)	

adding associativity

2-way set associative, 2 byte blocks, 2 sets

index	valid	tag	value	valid	tag	value
0	1	000000	mem[0x00] mem[0x01]	0		
1	0			0		

address (hex)	result
00000000 (00)	miss
00000001 (01)	
01100011 (63)	
01100001 (61)	
01100010 (62)	
00000000 (00)	
01100100 (64)	

adding associativity

2-way set associative, 2 byte blocks, 2 sets

index	valid	tag	value	valid	tag	value
0	1	000000	mem[0x00] mem[0x01]	0		
1	0			0		

address (hex)	result
00000000 (00)	miss
00000001 (01)	hit
01100011 (63)	
01100001 (61)	
01100010 (62)	
00000000 (00)	
01100100 (64)	

adding associativity

2-way set associative, 2 byte blocks, 2 sets

index	valid	tag	value	valid	tag	value
0	1	000000	mem[0x00] mem[0x01]	0		
1	1	011000	mem[0x62] mem[0x63]	0		

address (hex)	result
00000000 (00)	miss
00000001 (01)	hit
01100011 (63)	miss
01100001 (61)	
01100010 (62)	
00000000 (00)	
01100100 (64)	

adding associativity

2-way set associative, 2 byte blocks, 2 sets

index	valid	tag	value	valid	tag	value
0	1	000000	mem[0x00] mem[0x01]	1	011000	mem[0x60] mem[0x61]
1	1	011000	mem[0x62] mem[0x63]	0		

address (hex)	result
00000000 (00)	miss
00000001 (01)	hit
01100011 (63)	miss
01100001 (61)	miss
01100010 (62)	
00000000 (00)	
01100100 (64)	

adding associativity

2-way set associative, 2 byte blocks, 2 sets

index	valid	tag	value	valid	tag	value
0	1	000000	mem[0x00] mem[0x01]	1	011000	mem[0x60] mem[0x61]
1	1	011000	mem[0x62] mem[0x63]	0		

address (hex)	result
00000000 (00)	miss
00000001 (01)	hit
01100011 (63)	miss
01100001 (61)	miss
01100010 (62)	hit
00000000 (00)	
01100100 (64)	

adding associativity

2-way set associative, 2 byte blocks, 2 sets

index	valid	tag	value	valid	tag	value
0	1	000000	mem[0x00] mem[0x01]	1	011000	mem[0x60] mem[0x61]
1	1	011000	mem[0x62] mem[0x63]	0		

address (hex)	result
00000000 (00)	miss
00000001 (01)	hit
01100011 (63)	miss
01100001 (61)	miss
01100010 (62)	hit
00000000 (00)	hit
01100100 (64)	

adding associativity

2-way set associative, 2 byte blocks, 2 sets

index	valid	tag	value	valid	tag	value
0	1	000000	mem[0x00] mem[0x01]	1	011000	mem[0x60] mem[0x61]
1	1	011000	mem[0x62] mem[0x63]	0		

address (hex)	result
00000000 (00)	miss
00000001 (01)	hit
01100011 (63)	miss
01100001 (61)	miss
01100010 (62)	hit
00000000 (00)	hit
01100100 (64)	miss

needs to replace block in set 0!

cache operation (associative)

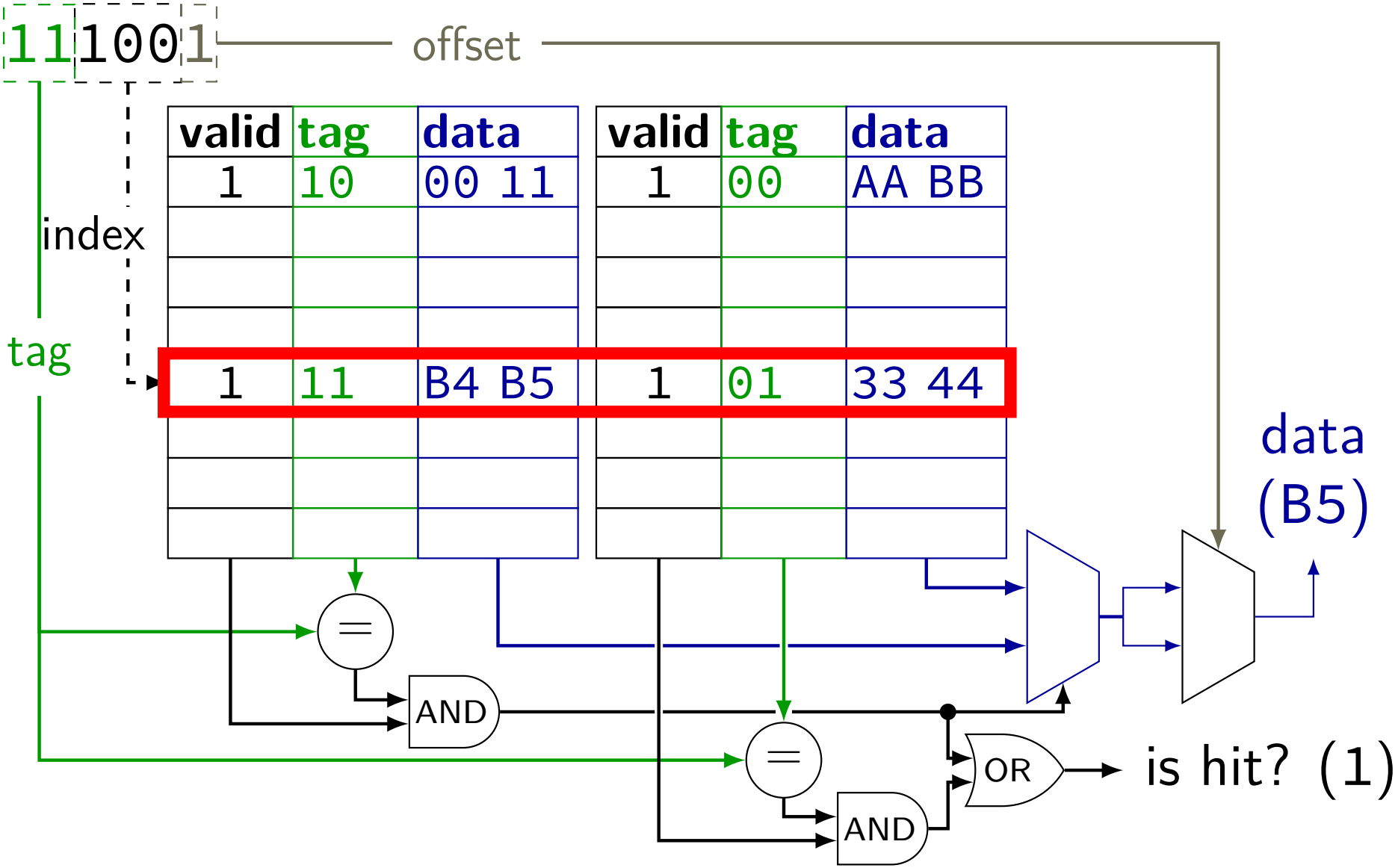

cache operation (associative)

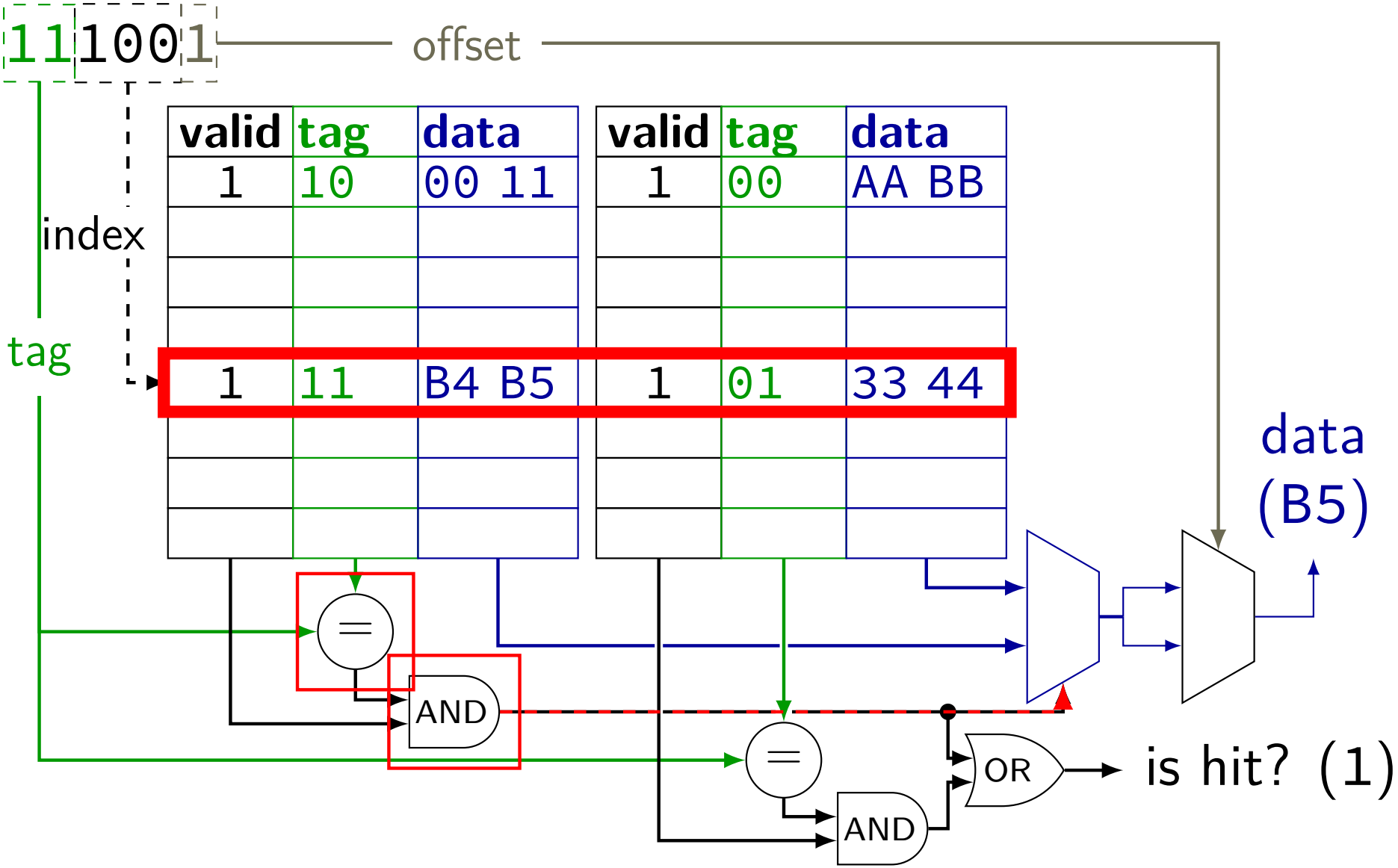

cache operation (associative)

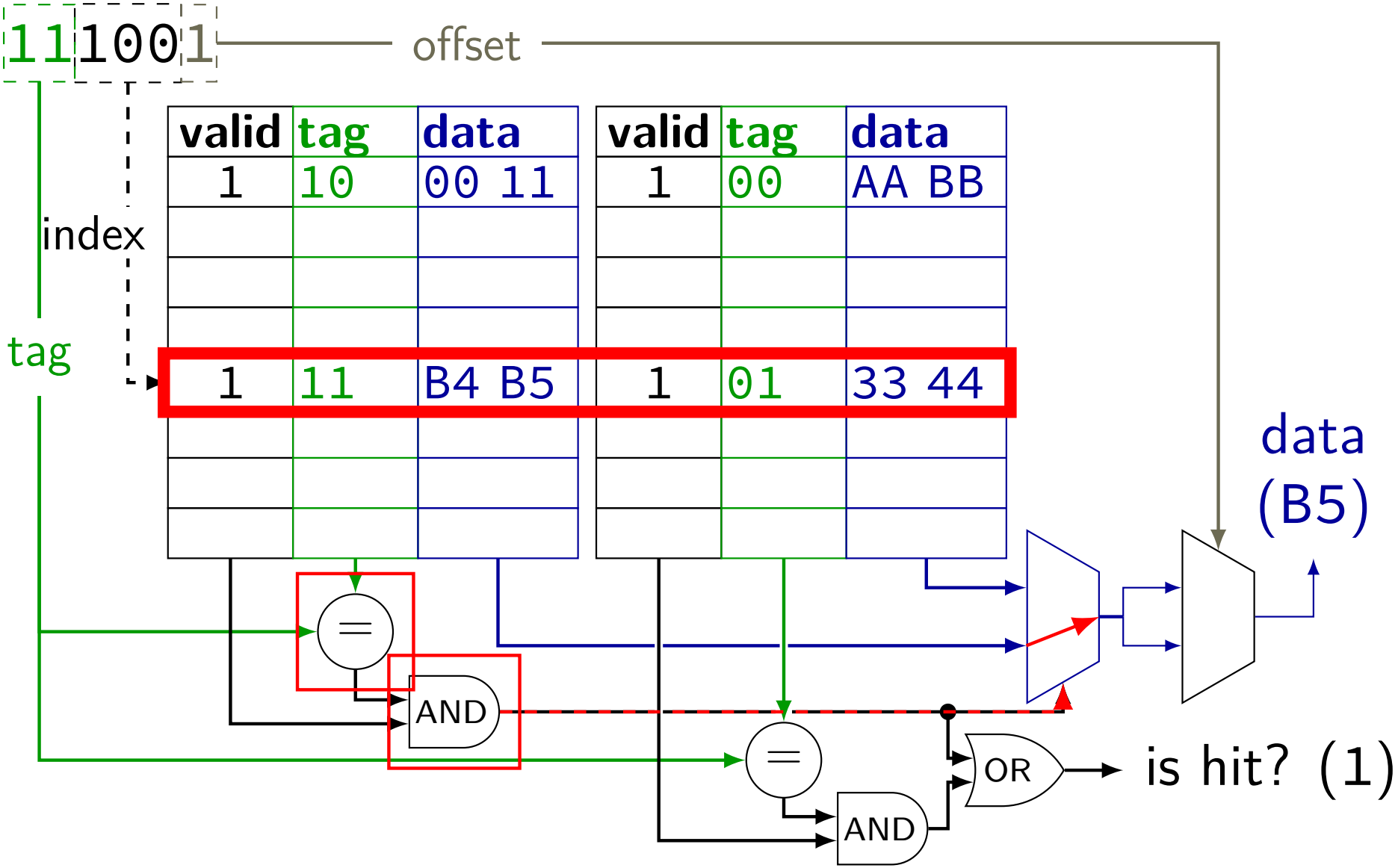

replacement policies

2-way set associative, 2 byte blocks, 2 sets

index	valid	tag	value	valid	tag	value
0	1	000000	mem[0x00] mem[0x01]	1	011000	mem[0x60] mem[0x61]
1	1	011000	mem[0x62] mem[0x63]	0		

address (hex)	result
000	
00000001 (01)	hit
01100011 (63)	miss
01100001 (61)	miss
01100010 (62)	hit
00000000 (00)	hit
01100100 (64)	miss

how to decide where to insert 0x64?

replacement policies

2-way set associative, 2 byte blocks, 2 sets

index	valid	tag	value	valid	tag	value	LRU
0	1	000000	mem[0x00] mem[0x01]	1	011000	mem[0x60] mem[0x61]	1
1	1	011000	mem[0x62] mem[0x63]	0			1

address (hex)	result
00000000 (00)	mi
00000001 (01)	hit
01100011 (63)	mi
01100001 (61)	miss
01100010 (62)	hit
00000000 (00)	hit
01100100 (64)	miss

track which block was read least recently
updated on every access

example replacement policies

least recently used and approximations

- take advantage of temporal locality
- exact: $\lceil \log_2(E!) \rceil$ bits per set for E-way cache
- good approximations: E to $2E$ bits

first-in, first-out

- counter per set — where to replace next

(pseudo-)random

- no extra information!

associativity terminology

direct-mapped — one block per set

E-way set associative — E blocks per set

fully associative — one set total (everything in one set)

Tag-Index-Offset formulas (2)

m	memory addreses bits (Y86-64: 64)
E	number of blocks per set ("ways")
$S = 2^s$	number of sets
s	(set) index bits
$B = 2^b$	block size
b	(block) offset bits
$t = m - (s + b)$	tag bits
$C = B \times S \times E$	cache size (excluding metadata)

Tag-Index-Offset exercise

m	memory addreses bits (Y86-64: 64)
E	number of blocks per set ("ways")
$S = 2^s$	number of sets
s	(set) index bits
$B = 2^b$	block size
b	(block) offset bits
$t = m - (s + b)$	tag bits
$C = B \times S \times E$	cache size (excluding metadata)

My laptop:

L1 Cache: 32KB, 8 blocks/set, 64 byte blocks
L2 Cache: 256KB, 4 blocks/set, 64 byte blocks
L3 Cache: 4096KB, 16 blocks/set, 64 byte blocks

Divide the address `0x34567` into tag, index, offset for each cache.

T-I-O exercise: L1

quantity	value for L1
block size (given)	$B = 64$Byte
	$B = 2^b$ (b: block offset bits)

T-I-O exercise: L1

quantity	value for L1
block size (given)	$B = 64$Byte
	$B = 2^b$ (b: block offset bits)
block offset bits	$b = 6$

T-I-O exercise: L1

quantity	value for L1
block size (given)	$B = 64$Byte
	$B = 2^b$ (b: block offset bits)
block offset bits	$b = 6$
blocks/set (given)	$E = 8$
cache size (given)	$C = 32$KByte $= E \times B \times S$

T-I-O exercise: L1

quantity	value for L1
block size (given)	$B = 64$Byte
	$B = 2^b$ (b: block offset bits)
block offset bits	$b = 6$
blocks/set (given)	$E = 8$
cache size (given)	$C = 32$KByte $= E \times B \times S$
	$S = \dfrac{C}{B \times E}$ (S: number of sets)

T-I-O exercise: L1

quantity	value for L1
block size (given)	$B = 64\text{Byte}$
block offset bits	$B = 2^b$ (b: block offset bits) $b = 6$
blocks/set (given)	$E = 8$
cache size (given)	$C = 32\text{KByte} = E \times B \times S$
number of sets	$S = \frac{C}{B \times E}$ (S: number of sets) $S = \frac{32\text{KByte}}{64\text{Byte} \times 8} = 64$

T-I-O exercise: L1

quantity	value for L1
block size (given)	$B = 64\text{Byte}$
block offset bits	$B = 2^b$ (b: block offset bits) $b = 6$
blocks/set (given)	$E = 8$
cache size (given)	$C = 32\text{KByte} = E \times B \times S$
number of sets	$S = \frac{C}{B \times E}$ (S: number of sets) $S = \frac{32\text{KByte}}{64\text{Byte} \times 8} = 64$
set index bits	$S = 2^s$ (s: set index bits) $s = \log_2(64) = 6$

T-I-O results

	L1	L2	L3
sets	64	1024	4096
block offset bits	6	6	6
set index bits	6	10	12
tag bits		(the rest)	

T-I-O: splitting

	L1	L2	L3
block offset bits	6	6	6
set index bits	6	10	12
tag bits	(the rest)		

	3	4	5	6	7
`0x34567`:	`0011`	`0100`	`0101`	`0110`	`0111`

bits 0-5 (all offsets): `100111` = `0x27`

T-I-O: splitting

	L1	L2	L3
block offset bits	6	6	6
set index bits	6	10	12
tag bits	(the rest)		

	3	4	5	6	7
`0x34567`:	`0011`	`0100`	`0101`	`0110`	`0111`

bits 0-5 (all offsets): `100111` = `0x27`

T-I-O: splitting

	L1	L2	L3
block offset bits	6	6	6
set index bits	6	10	12
tag bits	(the rest)		

	3	4	5	6	7
`0x34567`:	`0011`	`0100`	`0101`	`0110`	`0111`

bits 0-5 (all offsets): `100111` = `0x27`

L1:

bits 6-11 (L1 set): `01 0101` = `0x15`
bits 12- (L1 tag): `0x34`

T-I-O: splitting

	L1	L2	L3
block offset bits	6	6	6
set index bits	6	10	12
tag bits	(the rest)		

	3	4	5	6	7
`0x34567`:	`0011`	`0100`	`0101`	`0110`	`0111`

bits 0-5 (all offsets): `100111` = `0x27`

L1:

bits 6-11 (L1 set): `01 0101` = `0x15`
bits 12- (L1 tag): `0x34`

T-I-O: splitting

	L1	L2	L3
block offset bits	6	6	6
set index bits	6	10	12
tag bits	(the rest)		

	3	4	5	6	7
`0x34567`:	`0011`	`0100`	`0101`	`0110`	`0111`

bits 0-5 (all offsets): `100111` = `0x27`

L2:

bits 6-15 (set for L2): `01 0001 0101` = `0x115`
bits 16-: `0x3`

T-I-O: splitting

	L1	L2	L3
block offset bits	6	6	6
set index bits	6	10	12
tag bits	(the rest)		

	3	4	5	6	7
`0x34567`:	`0011`	`0100`	`0101`	`0110`	`0111`

bits 0-5 (all offsets): `100111` = `0x27`

L2:

bits 6-15 (set for L2): `01 0001 0101` = `0x115`
bits 16-: `0x3`

T-I-O: splitting

	L1	L2	L3
block offset bits	6	6	6
set index bits	6	10	12
tag bits	(the rest)		

	3	4	5	6	7
`0x34567`:	`0011`	`0100`	`0101`	`0110`	`0111`

bits 0-5 (all offsets): `100111` = `0x27`

L3:

bits 6-17 (set for L3): `1101 0001 0101` = `0xD15`
bits 18-: `0x0`

T-I-O: answers

	L1	L2	L3
offset	`0x27`	`0x27`	`0x27`
index	`0x15`	`0x115`	`0xD15`
tag	`0x34`	`0x3`	`0x0`

writing to caches

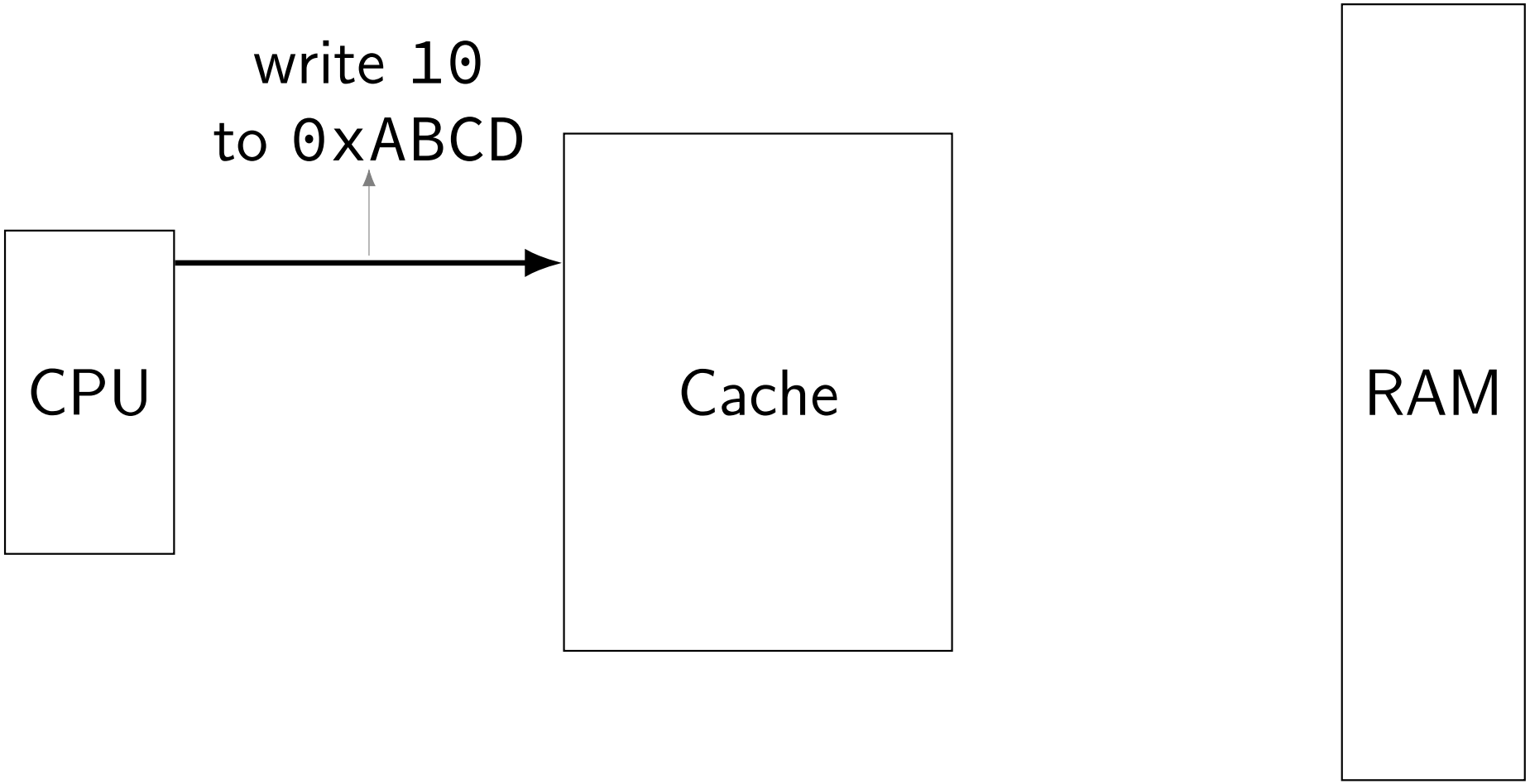

writing to caches

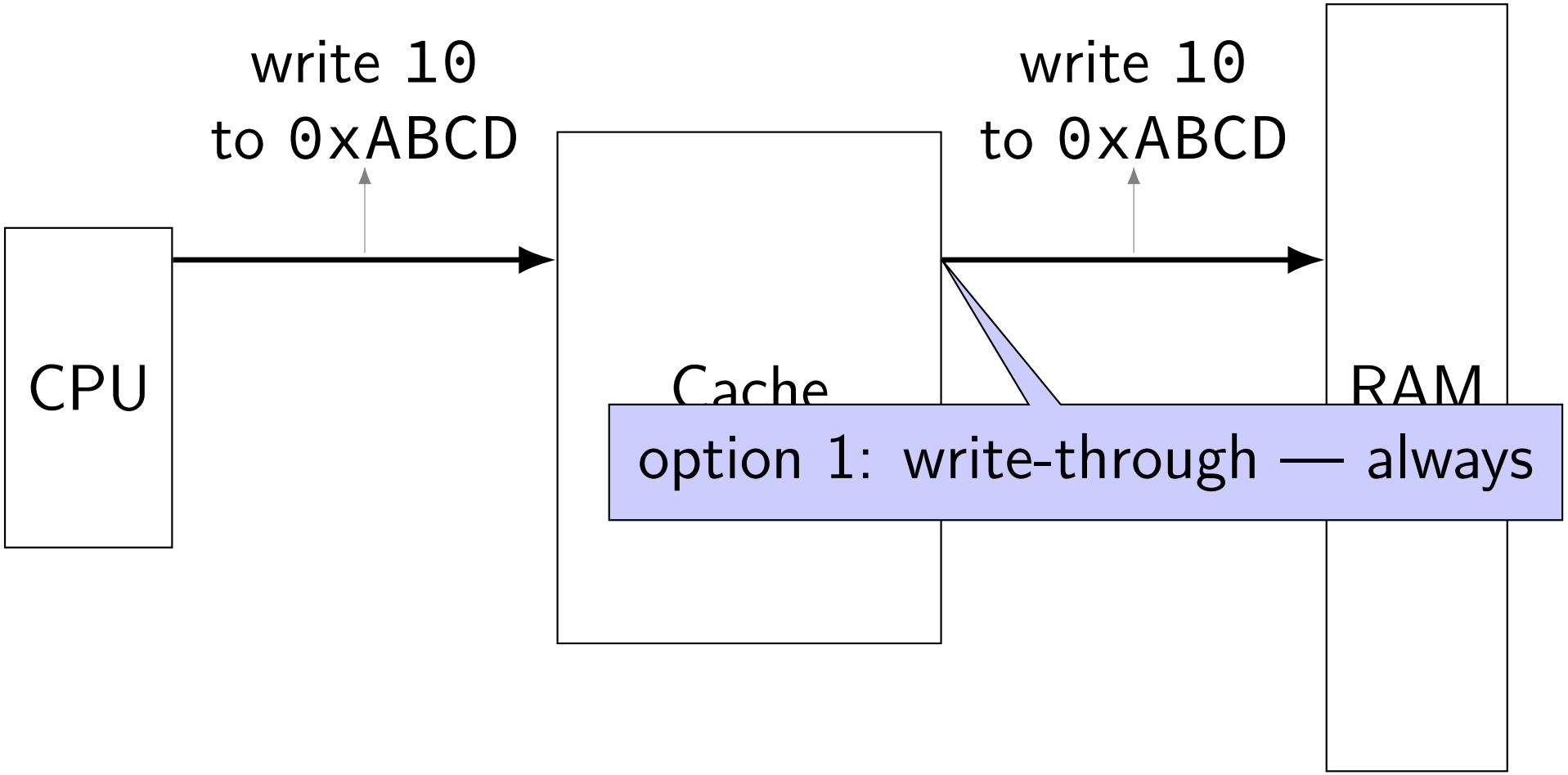

writing to caches

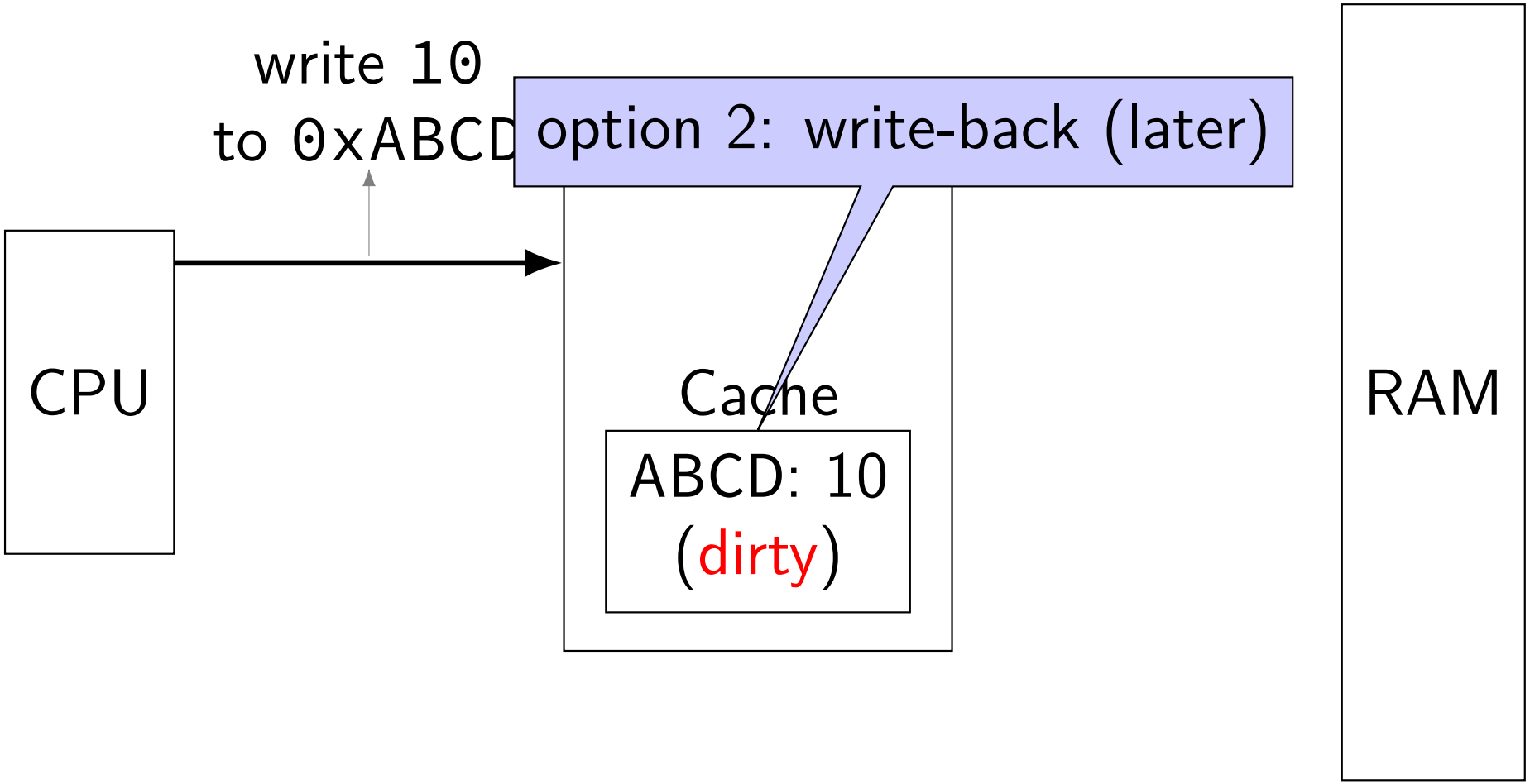

writing to caches

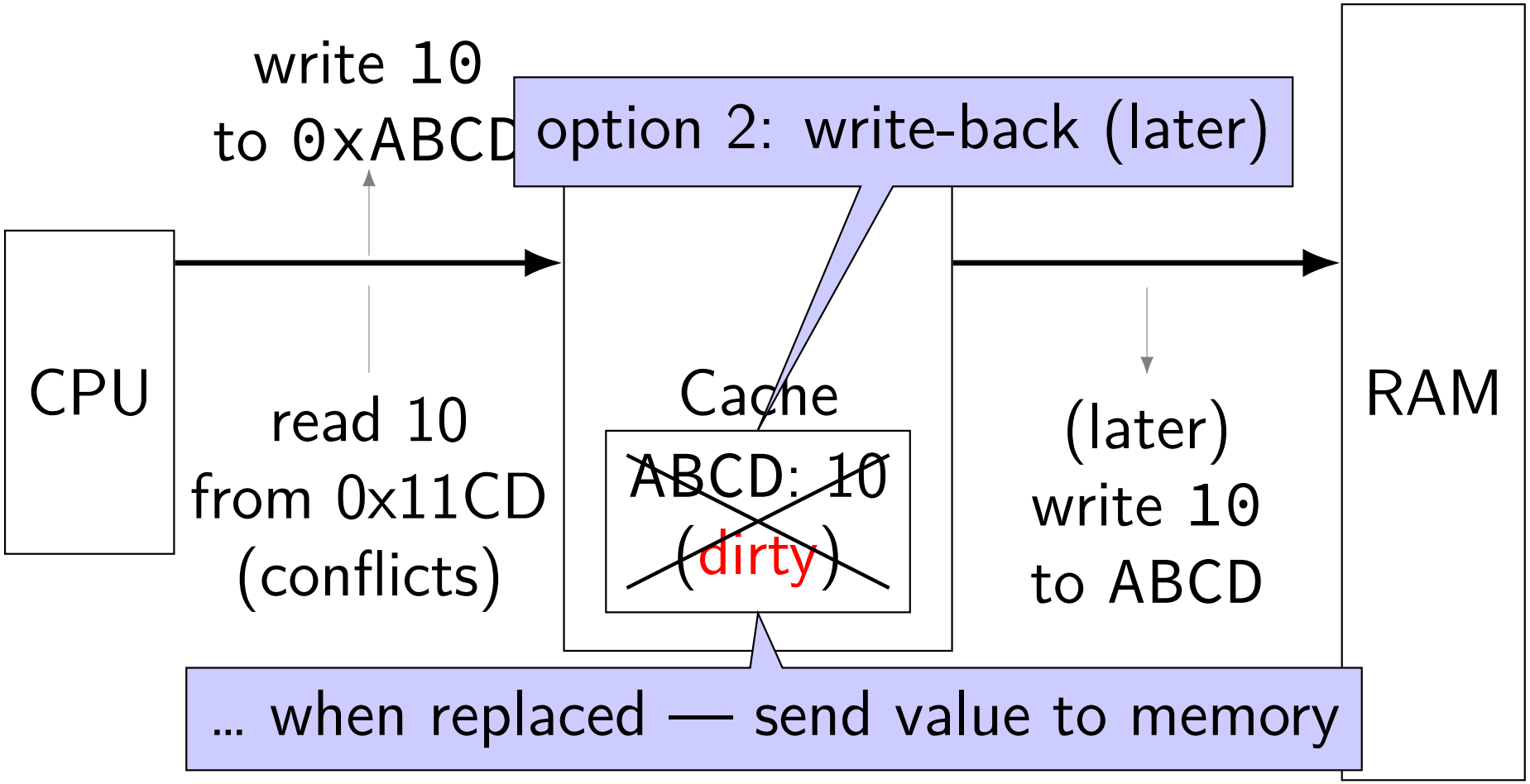

writeback policy

changed value!

2-way set associative, 2 byte blocks, 2 sets

index	valid	tag	value	dirty	valid	tag	value	dirty	LRU
0	1	000000	mem[0x00] mem[0x01]	0	1	011000	mem[0x60]* mem[0x61]*	1	1
1	1	011000	mem[0x62] mem[0x63]	0	0				0

1 = dirty (different than memory)
needs to be written if evicted

allocate on write?

processor writes less than whole cache block

block not yet in cache

two options:

write-allocate

fetch rest of cache block, replace written part

write-no-allocate

send write through to memory
guess: not read soon?

write-allocate

2-way set associative, LRU, writeback

index	valid	tag	value	dirty	valid	tag	value	dirty	LRU
0	1	000000	mem[0x00] mem[0x01]	0	1	011000	mem[0x60]* mem[0x61]*	1	1
1	1	011000	mem[0x62] mem[0x63]	0	0				0

writing 0xFF into address 0x04?

index 0, tag 000001

write-allocate

2-way set associative, LRU, writeback

index	valid	tag	value	dirty	valid	tag	value	dirty	LRU
0	1	000000	mem[0x00] mem[0x01]	0	1	011000	mem[0x60]* mem[0x61]*	1	1
1	1	011000	mem[0x62] mem[0x63]	0	0				0

writing 0xFF into address 0x04?

index 0, tag 000001

step 1: find least recently used block

write-allocate

2-way set associative, LRU, writeback

index	valid	tag	value	dirty	valid	tag	value	dirty	LRU
0	1	000000	mem[0x00] mem[0x01]	0	1	011000	mem[0x60]* mem[0x61]*	~~1~~	1
1	1	011000	mem[0x62] mem[0x63]	0	0				0

writing 0xFF into address 0x04?

index 0, tag 000001

step 1: find least recently used block

step 2: possibly writeback old block

write-allocate

2-way set associative, LRU, writeback

index	valid	tag	value	dirty	valid	tag	value	dirty	LRU
0	1	000000	mem[0x00] mem[0x01]	0	1	011000	0xFF mem[0x05]	1	0
1	1	011000	mem[0x62] mem[0x63]	0	0				0

writing 0xFF into address 0x04?

index 0, tag 000001

step 1: find least recently used block

step 2: possibly writeback old block

step 3a: read in new block – to get mem[0x05]

step 3b: update LRU information

write-no-allocate

2-way set associative, LRU, writeback

index	valid	tag	value	dirty	valid	tag	value	dirty	LRU
0	1	000000	mem[0x00] mem[0x01]	0	1	011000	mem[0x60]* mem[0x61]*	1	1
1	1	011000	mem[0x62] mem[0x63]	0	0				0

writing 0xFF into address 0x04?

step 1: is it in cache yet?

step 2: no, just send it to memory
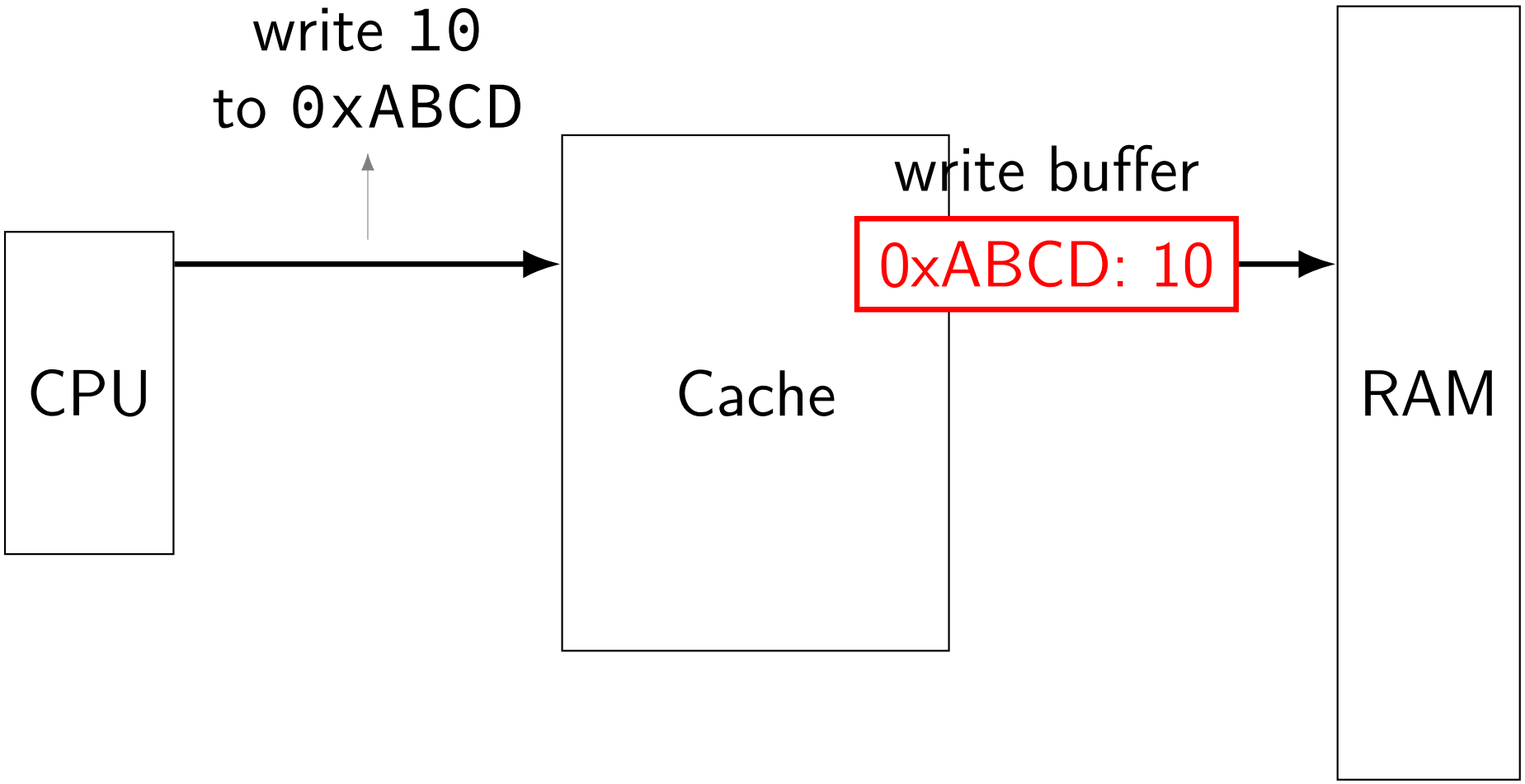
fast writes