Clocks, Other Hardware

CS 2130: Computer Systems and Organization 1

September 12, 2022

Announcements

- Homework 1 due tonight!
- Homework 2 available tomorrow (and in class on Wednesday)

Quiz Review

$0xCA = \underbrace{1100}_{12\ c}\underbrace{1010}_{10\ a}$

$>> 3$

unsigned

$\rightarrow 00011001$

$-a$ 25

signed

$111\ 11001$

-7 110

1

$111 = 7$

$<< 3$

$\boxed{11001000}$ C8

$\wedge\ 11001010$

$0 \ldots 010 = 2$

$a + (\sim a + 1) = 0$

$a + \sim a = -1$

-10110000

$= -1.011 \times 2^7$

11110 011

$q = 0xbebe$ & $0x0f0f$

$0x0e0e$

$(q >> 4)$ & $0x0f0f$ $+ 0x0b0b$

Gate Delay

What happens when I change my input?

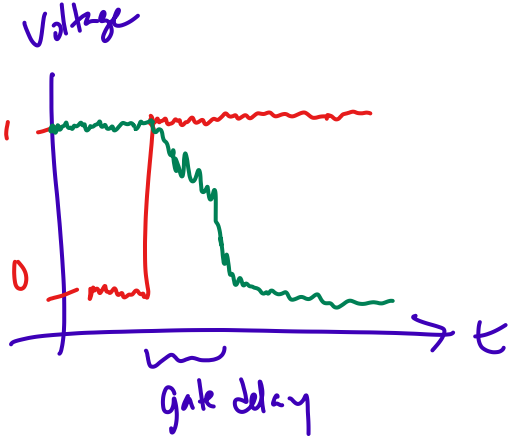

Increment Circuit

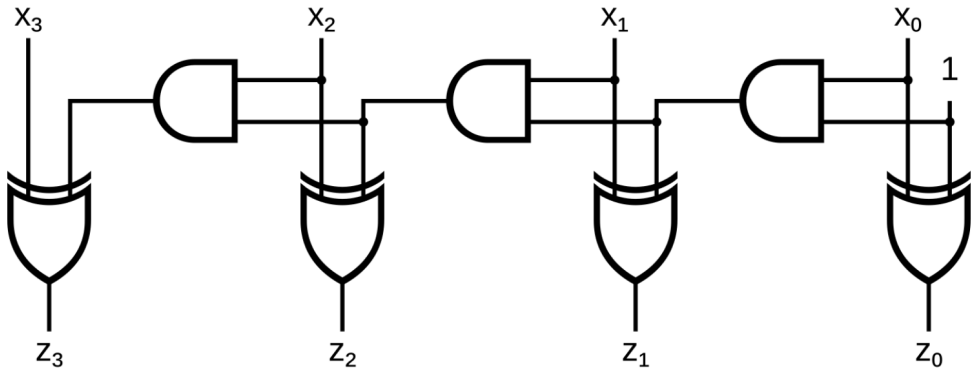

Building a Counter

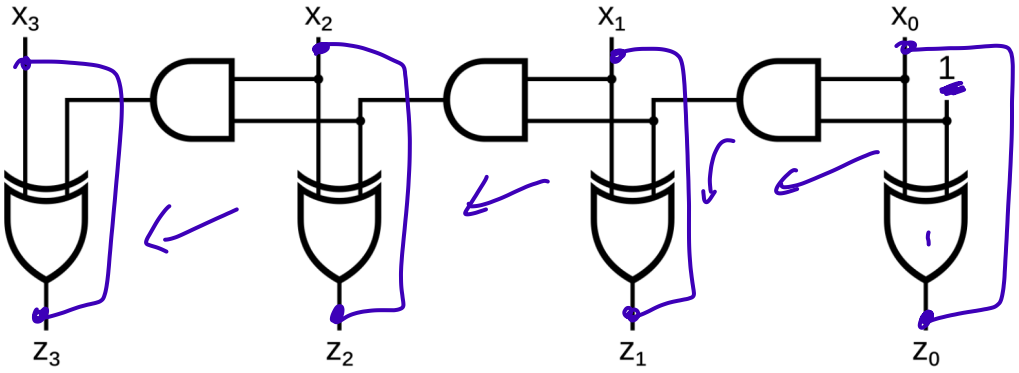

Building a Counter

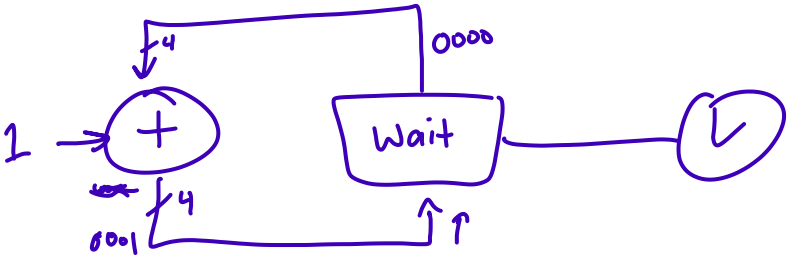

Building a Counter - Waiting

1-bit Register Circuit

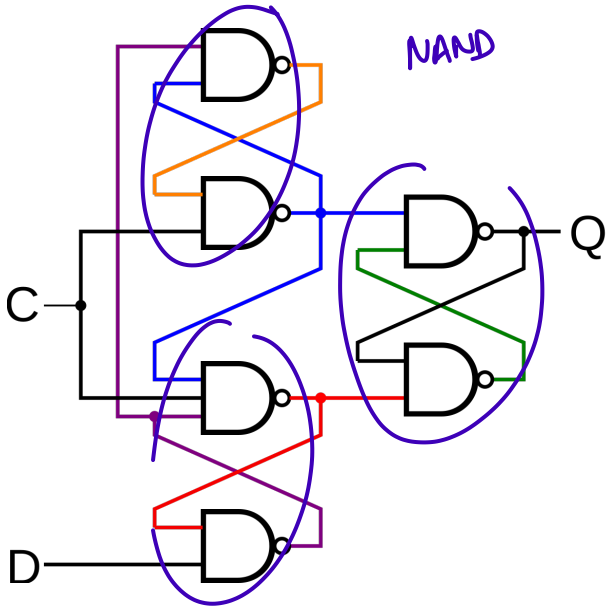

1-bit Register Circuit

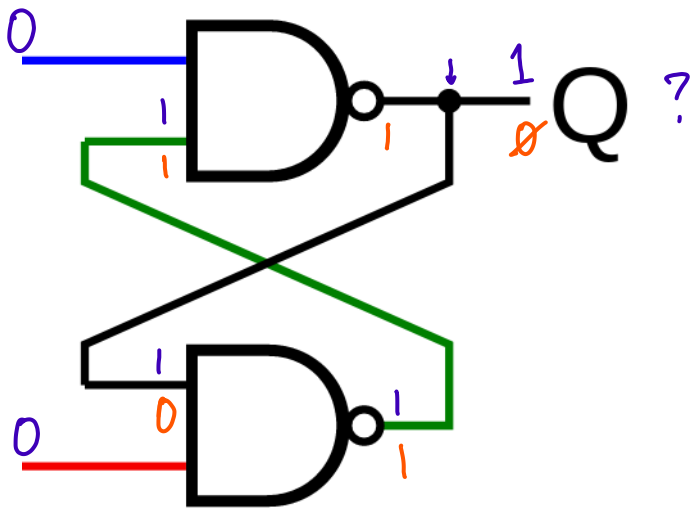

1-bit Register Circuit

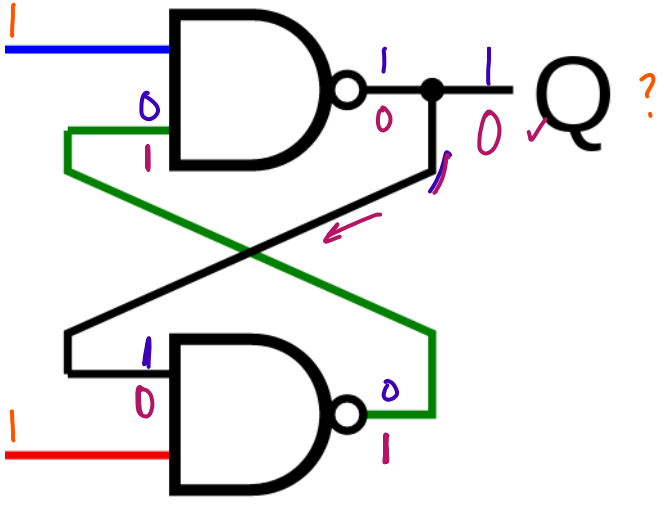

1-bit Register Circuit

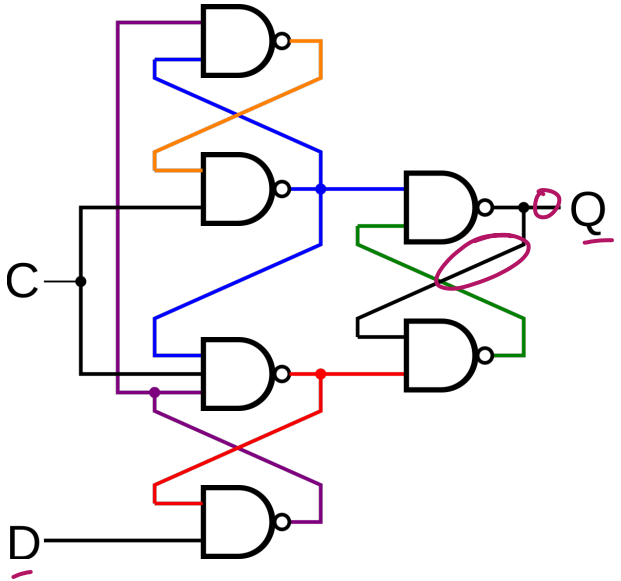
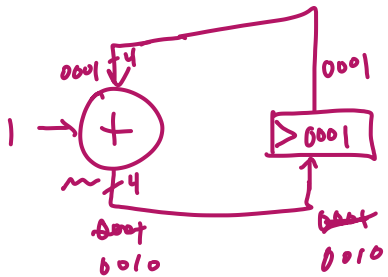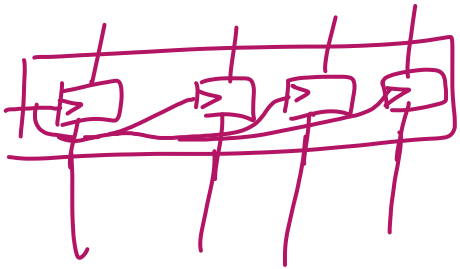
Building a Counter